PROJECT TITLE: EASTON COMMERCE PARK

RESIDENTIAL

HACKETT PARK

GRAVEL PATH

PAVED PATH

HACKETT PARK

EASTON AREA MIDDLE SCHOOL

RESTAURANTS & BUSINESS

PROPOSED BUILDING
1,006,880 S.F. = 23.11 ACRES
1,624' X 620', 336.2' F.F.

JB-ROOF A-1
JB-ROOF A-2
JB-ROOF B-1
JB-ROOF B-2
JB-ROOF C-1
JB-ROOF C-2
JB-ROOF C-3
JB-ROOF C-4

U.S. ROUTE 22
(VARIABLE WIDTH R.O.W.)

WOOD AVENUE
(50' RIGHT-OF-WAY WIDTH)

THIRTEENTH STREET
(SR 2001/80' PUBLIC R.O.W.)

BUSHKILL CREEK

RETAINING WALL

EX. WALL

EX GRAVEL

EX ASPHALT

EX EDGE OF ASPHALT

EX SAN MH
RIM=287.19

EX SAN MH
RIM=279.16

EX SAN MH
RIM=310.45

EX TEL MH
TEL=314.96

EX FH

EX TEL PED

EX FENCE

30" TREE

36" TREE

15" TREE

6" TREE

BOARD PAVED PARKING LOT

BUSHKILL DRIVE

SIGN
LEFT TURN
35 MPH

STONE WALK

PAVED PATH

PROPOSED FEATURES LEGEND:

- PROPOSED BUILDING
- PROPOSED SIDEWALK
- PROPOSED PARKING SPACES
- PROPOSED CURB
- PROPOSED ELECTRIC LINE
- PROPOSED WATER MAIN
- PROPOSED SANITARY MAIN AND MANHOLE
- PROPOSED 24" RCP
- PROPOSED LIGHT DUTY PAVING AREA
- PROPOSED CONCRETE PAVING AREA
- LIMIT OF DISTURBANCE (65.59 ACRES)
- PROPOSED CONCRETE MONUMENTS
- PROPOSED DRAINAGE EASEMENT
- PROPOSED STORM PIPE AND INLET
- PROPOSED END SECTION AND RIP RAP
- PROPOSED BASIN UNDER DRAIN AND CLEAN OUT

IF THE PIPE SYMBOL HAS NO PIPE TO BE PROVIDED WITH ARROWS IN SLOPE

EXISTING FEATURES LEGEND

- EXISTING TOPOGRAPHY WITH CORNER
- PENNDOT LEGAL RIGHT-OF-WAY
- EXISTING ADJOINING BOUNDARY LINE
- EXISTING BUILDING
- EXISTING CONCRETE FEATURE
- EXISTING MINOR CONTOUR
- EXISTING MAJOR CONTOUR
- EXISTING CURB
- EXISTING EDGE OF ASPHALT
- EXISTING FENCE LINE
- EXISTING PAVEMENT MARKING WITH LABEL
- EXISTING SIGN
- EXISTING TREE LINE
- EXISTING EASEMENT
- EXISTING SANITARY SEWER
- EXISTING STORM PIPE
- EXISTING STREAM
- EXISTING WOODS
- EXISTING GRAVEL
- EXISTING SOILS
- EXISTING EDGE OF CONCENTRATION
- EXISTING LIMIT OF DISTURBANCE (65.59 ACRES)
- EXISTING GAS LINE
- EXISTING CABLE TELEPHONE LINE
- EXISTING PROPERTY BOUNDARY
- EXISTING SANITARY SEWER MANHOLE
- EXISTING UTILITY POLE

GRAPHIC SCALE

200' 100' 0 100' 200'

1" = 100'

Before You Dig Anywhere In PENNSYLVANIA
STOP! CALL 1-800-242-1776 TOLL FREE

NOTE:
The location of underground utilities shown on this plan were obtained by utility owners and surface facilities, and are approximate in location. The contractor must verify the exact location and depth of utilities prior to any earthmoving activities.

Pennsylvania One Call System, Inc. Serial number for this project are 20230511306,20230511307,20230511308

EASTON WOOD AVE PropCO,LLC
8801RIVER CROSSING Blvd
INDIANAPOLIS, IN 46240

JOB:EASTON COMMERCE PARK
Wilson Borough
Palmer Twp & City of Easton
NORTHAMPTON County, PA

PIN: CHECK SHEET C-100
CHECKED BY: DH
DRAWN BY: CF
DATE: 11/01/2024
SCALE: 1:100
DRAWING: C-107
PROJECT: 2022-528
SHEET: 28 OF 53

BOGIA ENGINEERING INC.
1340 PENN AVE WYOMISSING, PA 19610
PHONE: 610-678-3071 - FAX: 610-678-3517
WWW.BOGIAENG.COM

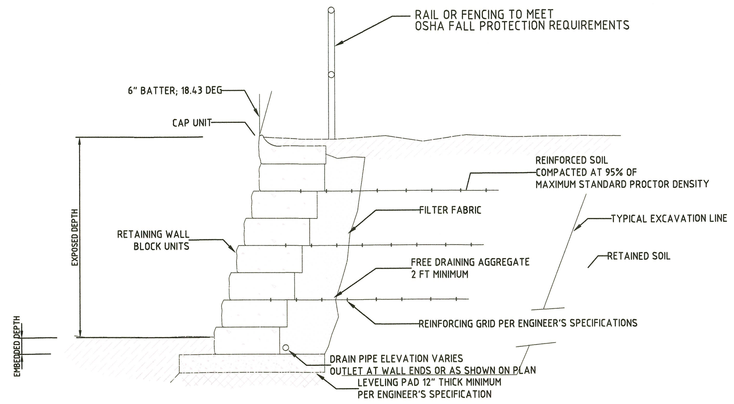
PRELIMINARY & FINAL
EASTON COMMERCE PARK
PIPE NETWORK PLAN OVERAL

BEI

COPYRIGHT 2024, BOGIA ENGINEERING INC.

DATE	REVISION
2024-10-28	PER DEP COMMENTS & BOROUGH LETTER
2024-08-09	PER BORUGH COMMENTS
2024-07-15	PER LVPC, BOROUGH, & CITY COMMENTS
—	—
—	—
—	—
—	—
—	—
—	—

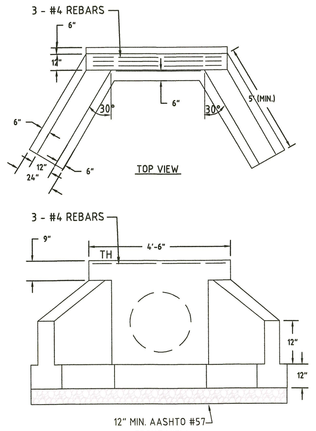
PROJECT TITLE: EASTON COMMERCE PARK



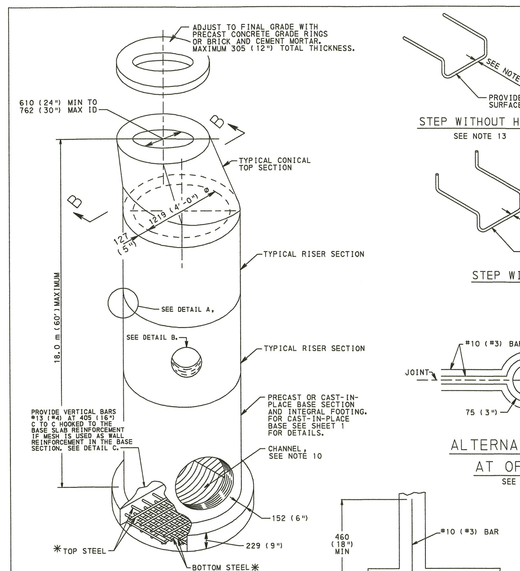
NOTES:
1. SURFACE MATERIAL AND COLOR TREATMENT TO BE APPROVED BY ARCHITECT.
2. PROVIDE RAILING OR FENCING ALONG TOP EDGE OF WALL FOR SAFETY.
3. THE DESIGN OF WALLS MUST BE SEALED BY A PROFESSIONAL ENGINEER REGISTERED IN THE COMMONWEALTH OF PENNSYLVANIA.
4. PEDESTRIAN BARRIER SHALL BE PROVIDED ALONG THE TOP OF ALL WALLS.
5. WALL TO BE DESIGNED TO "BRIDGE" ACROSS ALL STORM SEWER PIPES SO ADDITIONAL LOAD FROM WALL OR FILL IT RETAINS IS NOT IMPOSED ON THE PIPES.
6. WILSON BOROUGH AND CITY OF EASTON APPROVAL OF DESIGN DETAILS SEALED BY A PROFESSIONAL ENGINEER REGISTERED IN THE COMMONWEALTH OF PENNSYLVANIA IS REQUIRED PRIOR TO CONSTRUCTION.
7. WALL IS TYPICAL SECTION, ADDITIONAL INFORMATION MAY BE NECESSARY FOR CONSTRUCTION OR DIFFERENT WALL DESIGN PROVIDED DEPENDING ON SITE CONDITIONS.

SEGMENTAL BLOCK RETAINING WALL

(PROVIDED AS EXAMPLE, SEE NOTE 7)



ENDWALL (TYPE DW)



NOTES
1. PRECAST MANHOLES MEETING THE REQUIREMENTS OF PUBLICATION 408, SECTION 714, MAY BE SUBSTITUTED FOR THE STANDARD CAST-IN-PLACE MANHOLE. FOR DEVIATION OR MODIFICATION OF THE STANDARDS, SUBMIT SHOP DRAWINGS FOR APPROVAL.
2. FOR CONSTRUCTION REQUIREMENTS SEE NOTE 1, SHEET 1. FOR DESIGN REQUIREMENTS SEE NOTE 1, SHEET 5.
3. FOR PERMISSIBLE LOCATION OF PIPES SEE PLAN VIEW AND NOTE 3, SHEET 1.
4. FOR RISERS OR BASE SECTIONS WITH OPENINGS, PROVIDE A MINIMUM HEIGHT OF SECTION SO AS TO PROVIDE AN UNCUT WALL EQUAL TO 200% OF THE OPENING, BUT NO LESS THAN 203 (8") BETWEEN THE OPENING AND THE CLOSEST JOINT BETWEEN RISERS = SEE DETAIL B.
5. FOR PRECAST RISER OR BASE SECTIONS WITH ONE OPENING LOCATED AT DEPTHS TO 18.0 m (60') , PROVIDE CIRCUMFERENTIAL REINFORCEMENT IN ACCORDANCE WITH SECTION 675.3(2)(b). FOR DEPTHS GREATER THAN 18.0 m (60') TO 30.0 m (100'), FOR SECTIONS WITH TWO OR MORE CIRCUMFERENTIAL REINFORCEMENT EQUAL TO 240 mm²/VERTICAL m (0.16 in²/VERTICAL FT.) FOR THE HEIGHT OF RISER OR BASE SECTION.
6. FOR RISERS OR BASE SECTIONS WITH TWO OR MORE OPENINGS, LOCATED AT A DEPTH GREATER THAN 3.0 m (10'), BUT LESS THAN OR EQUAL TO 7.6 m (25'), PROVIDE CIRCUMFERENTIAL REINFORCEMENT EQUAL TO 310 mm²/VERTICAL m (0.44 in²/VERTICAL FT.) FOR THE HEIGHT OF THE RISER OR BASE SECTION.
7. FOR RISERS OR BASE SECTIONS WITH TWO OR MORE OPENINGS, LOCATED AT DEPTHS GREATER THAN 7.6 m (25'), BUT LESS THAN 30.0 m (100'), USE A 254 (10") THICK WALL RISER OR BASE SECTION WITH CIRCUMFERENTIAL REINFORCEMENT EQUAL TO 470 mm²/VERTICAL m (0.22 in²/VERTICAL FT.) FOR EACH RISER.
8. MARK RISERS OR BASE SECTIONS WITH HOLES CLEARLY WITH MAXIMUM ALLOWABLE DEPTH.
9. PROVIDE ADDITIONAL REINFORCEMENT BARS AROUND OPENINGS AS SHOWN ON REINFORCEMENT DETAILS AT OPENINGS SHEET 1.
10. FOR CHANNEL DETAILS IN PRECAST MANHOLE SEE CAST-IN-PLACE MANHOLE SHEET 1.
11. PROVIDE MANHOLE STEPS MEETING THE REQUIREMENTS OF PUBLICATION 408, SECTION 605.2.c.1. ALTERNATE CONFIGURATIONS AND DIMENSIONS, AS APPROVED BY THE ENGINEER, MAY BE USED.
12. PROVIDE MINIMUM 25 (1") SECTION DIMENSION FOR METAL STEPS. PROVIDE MINIMUM 19 (3/4") SECTION DIMENSION FOR NON-DETERIORATING MATERIAL STEPS.
13. MECHANICAL ANCHOR REQUIRED FOR INSTALLATION OF STEPS WITHOUT HOOKS.
14. THE ALTERNATE OPENING REINFORCEMENT DETAIL IS NOT DESIRABLE BY DESIGN. USE IT TO MEET EXISTING PIPE ELEVATIONS.

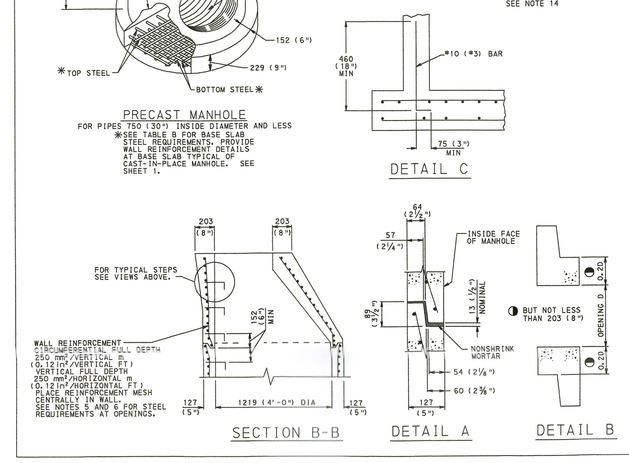


TABLE B

PRECAST MANHOLE HEIGHT	TOP STEEL REQUIREMENTS		BOTTOM STEEL REQUIREMENTS	
	B–1 BAR LENGTH	B–1 HEIGHT ABOVE GRADE	B–2 BAR LENGTH	B–2 HEIGHT ABOVE GRADE
0.0 m TO 9.0 m (0'-0" TO 30'-0")	NO. 13 BARS AT 150 C TO C OR 700 mm²/m WRF 152 MAXIMUM SPACING	NO. 8 BARS AT 75 C TO C (1'-0" WRF 6" MAXIMUM SPACING	NO. 13 BARS AT 300 C TO C OR 340 mm²/m WRF 152 MAXIMUM SPACING	NO. 13 BARS AT 150 C TO C (1'-0" WRF 6" MAXIMUM SPACING
9.0 m TO 16.0 m (30'-0" TO 60'-0")	NO. 16 BARS AT 150 C TO C OR 1180 mm²/m WRF 152 MAXIMUM SPACING	NO. 8 BARS AT 75 C TO C (2'-6" WRF 6" MAXIMUM SPACING	NO. 13 BARS AT 150 C TO C OR 670 mm²/m WRF 152 MAXIMUM SPACING	NO. 13 BARS AT 150 C TO C (2'-6" WRF 6" MAXIMUM SPACING

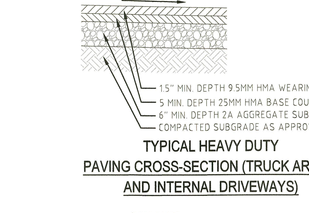
SEE NOTE 7, SHEET 1

NOTE: EITHER ALL METRIC OR ALL ENGLISH VALUES MUST BE USED ON PLANS. METRIC AND ENGLISH VALUES SHOWN MAY NOT BE MIXED.

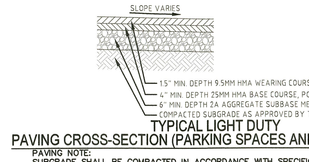
COMMONWEALTH OF PENNSYLVANIA
DEPARTMENT OF TRANSPORTATION
BUREAU OF DESIGN

STANDARD MANHOLES
PRECAST MANHOLES &
MANHOLE STEPS

RECOMMENDED APR. 15, 2004 — DIRECTOR, BUREAU OF DESIGN
RECOMMENDED APR. 15, 2004 — CHIEF ENGINEER
SHT 3 OF 6
RC-39M

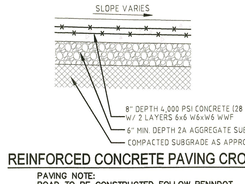


TYPICAL HEAVY DUTY PAVING CROSS-SECTION (TRUCK AREAS AND INTERNAL DRIVEWAYS)



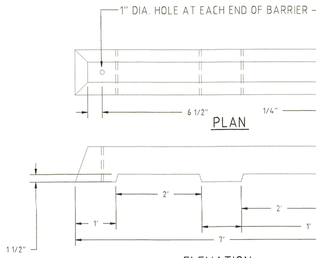
TYPICAL LIGHT DUTY PAVING CROSS-SECTION (PARKING SPACES AND PARKING AISLES)

PAVING NOTE:
SUBGRADE SHALL BE COMPACTED IN ACCORDANCE WITH SPECIFICATIONS OF PADOT PUBLICATION 408, LATEST EDITION. WHERE PARKING AREA(S) ARE TO BE USED FOR INFILTRATION PRACTICES, SUBGRADE SHALL NOT BE COMPACTED AND IT SHALL BE PROTECTED FROM COMPACTION FROM CONSTRUCTION EQUIPMENT, TRAFFIC, STORAGE OF MATERIALS, ETC. TO PRESERVE INFILTRATION CAPACITY OF SUBGRADE SOILS.



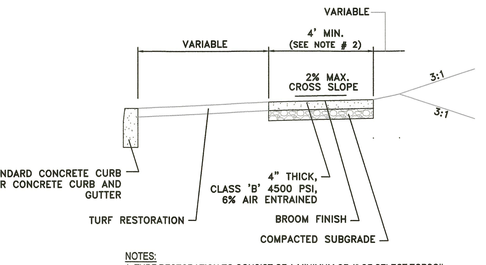
REINFORCED CONCRETE PAVING CROSS-SECTION

PAVING NOTE:
ROAD TO BE CONSTRUCTED FOLLOW PENNDOT SPECIFICATIONS FOR CONCRETE PAVING, INCLUDING BUT NOT LIMITED TO PUB. 72M, RC–20M AND RC–21M AS WELL AS PUB. 408.



NOTES:
1. DIMENSIONS SHOWN ARE APPROXIMATE.
2. USE WHEEL STOPS AS MANUFACTURED BY READING PRECAST OR APPROVED EQUAL.
3. SECURE WHEEL STOP WITH 18" #5 REBAR DRIVEN FLUSH WITH TOP OF WHEEL STOP.
4. PLACE WHEEL STOP WITH THE NEAREST EDGE 2' FROM EDGE OF PAVING OR CURB.
5. WHEEL STOPS TO BE PLACED AT ENDS OF ALL PARKING SPACES NOT ABUTTING CURB.

CONCRETE WHEEL STOP

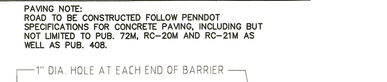


NOTES:
1. TURF RESTORATION TO CONSIST OF A MINIMUM OF 4" OF SELECT TOPSOIL, FERTILIZER AND SEED AS PER SPECIFICATIONS.
2. IF SUBGRADE MATERIAL IS UNSUITABLE, CONTRACTOR TO REMOVE PER COUNTY ENGINEER'S DISCRETION AND REPLACE WITH SELECT FILL AT NO EXTRA COST TO THE COUNTY.
3. SIDEWALK WIDTH SHALL BE 4'-0" MINIMUM UNLESS OTHERWISE NOTED ON THE APPROVED PLANS.
4. CONCRETE SHALL BE CLASS B WITH 28 DAY COMPRESSIVE STRENGTH OF 4500 PSI-6% ±1.5% AIR ENTRAINMENT.

STANDARD CONCRETE SIDEWALK

NOTES:
1. PENNDOT PUBLICATION 408, CLASS A CEMENT CONCRETE IS REQUIRED.
2. APPROVED ½" PREMOLDED EXPANSION JOINTS TO BE SPACED EVERY 20 FEET MAX.
3. CONTRACTION JOINTS ARE TO BE SPACED EVERY 10 FEET.

6" CONCRETE CURB

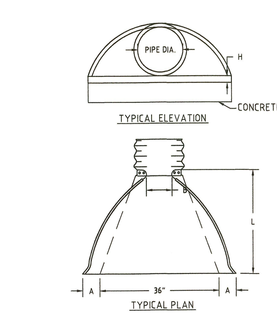


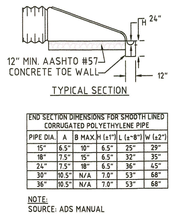
CURB TRANSITION FOR STANDARD CURBING



SIDEWALK CROSS-SECTION

NOTE:
- ALL CONSTRUCTION DETAILS ARE TO BE IN ACCORDANCE WITH THE WILSON BOROUGH AND CITY OF EASTON DESIGN DETAILS AND PRACTICES, SUBDIVISION AND LAND DEVELOPMENT ORDINANCE. ALL CONSTRUCTION DETAILS ARE TO ALSO REFERENCE LATEST VERSION OF PENNDOT PUBLICATION 408.
- ALL SIGNAGE SHALL COMPLY WITH THE REQUIREMENTS OF THE WILSON BOROUGH AND CITY OF EASTON ZONING ORDINANCE.

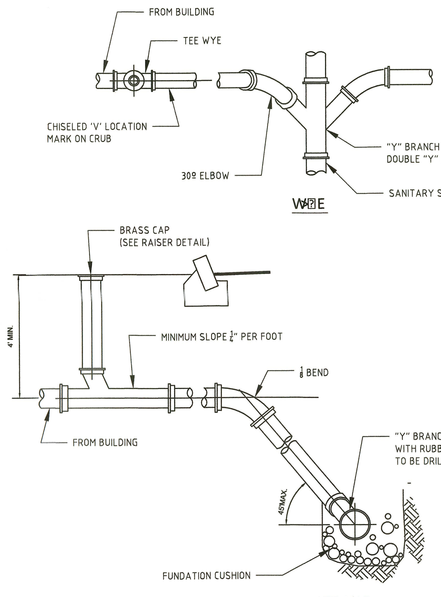




END SECTION DIMENSIONS FOR SMOOTH LINED CORRUGATED POLYETHYLENE PIPE					
PIPE DIA	B	MAX H (FT-IN)	L w/ R=1' (-0")	L w/ R=1.5' (-6")	L w/ R=2' (-0")
15"	6.5"	10'	6.5'	25'	29'
18"	11.5"	8'	6.5'	32'	35'
24"	11.5"	18'	6.5'	36'	45'
30"	16.5"	N/A	7.0'	53'	68'
36"	16.5"	N/A	7.0'	53'	68'

NOTE:
SOURCE: ADS MANUAL

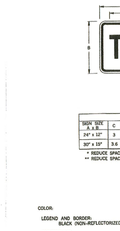
TYPICAL SLCPP END SECTION

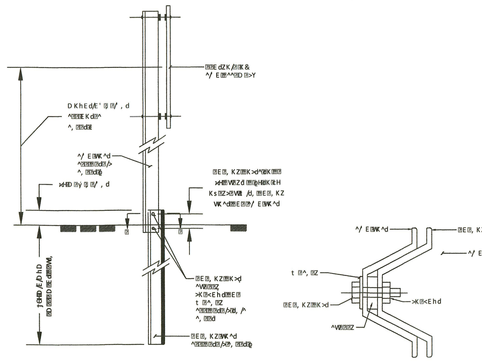


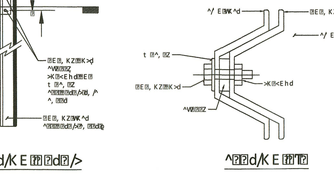
NOTE:
1. REFER TO UTILITY PLAN FOR PIPES SIZES, VERIFY WITH ARCHITECTURAL PLANS.
2. CONTACT ENGINEER WITH ANY CONFLICTS PRIOR TO ANY SEWER CONNECTION WORK.

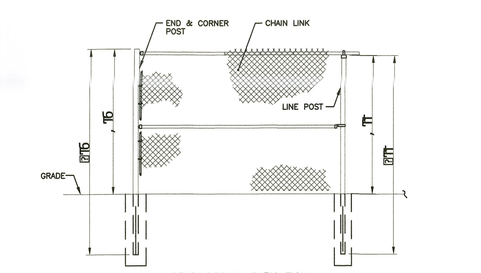
STANDARD CONNECTION DETAIL PER WILSON BOROUGH AND CITY OF EASTON







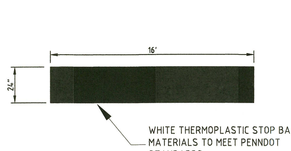


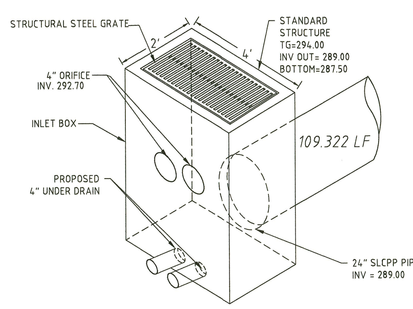


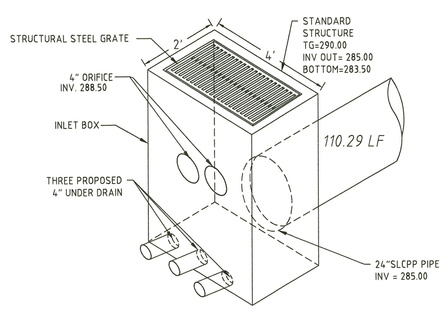
FENCE HEIGHT	END & CORNER POSTS		LINE POSTS	
NOMINAL HEIGHT	B–1 BAR LENGTH	B–1 HEIGHT ABOVE GRADE	B–2 BAR LENGTH	B–2 HEIGHT ABOVE GRADE
7'–0" (2134MM)	10'–0" (3048MM)	7'–0 5/8" (2150MM)	9'–8" (2946MM)	6'–8 7/8" (2054MM)

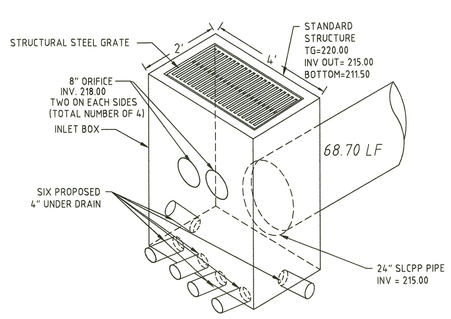
NOTES:
1. CHAINLINK FENCE TO INCLUDE POLYETHYLENE THERMOPLASTIC PRIVACY SLATS TO PROVIDE A VISUAL SCREEN ALONG REFUSE COLLECTION AREAS. NO PRIVACY SLATS FOR PERIMETER FENCING REQUIRED UNLESS SPECIFIED BY OWNER. ARCHITECT TO SPECIFY COLOR.
2. AS MANUFACTURED BY MASTER HALCO (WWW.FENCEONLINE.COM) OR APPROVED EQUAL.
3. PERIMETER FENCING IS PROHIBITED FROM HAVING BARBED WIRE PER ZONING ORDINANCE SECTION 209-37(A).

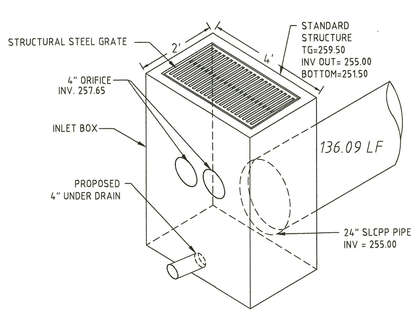
FENCE DETAIL



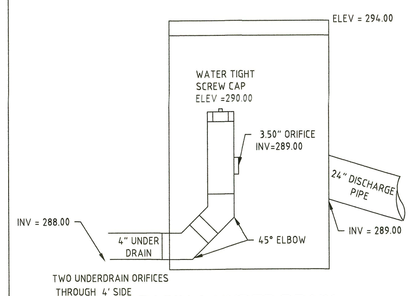


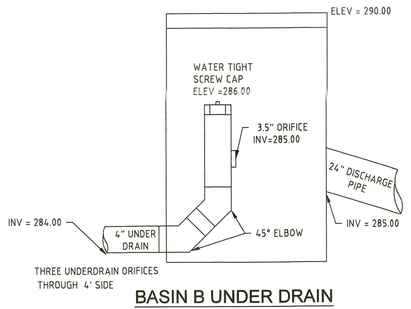


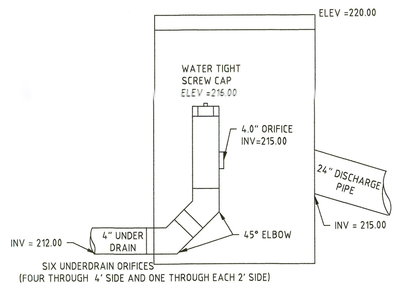


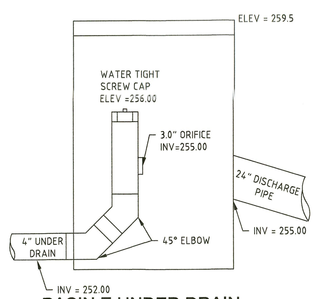


NOTES:
1. ALL CONNECTIONS IN MANIFOLD, AT CLEANOUTS AND AT OUTLET TO BE WITH 45° ELBOWS.
2. INVERT OF PERFORATED PIPE TO BE AT INVERT OF BASIN AT THE BOTTOM OF THE BIO-RETENTION MEDIA.
3. SOLVENT WELD ALL JOINTS.









NOTES:
1. ALL BENDS TO BE WITH 45° ELBOWS MAX.
2. UNDER DRAIN TO BE AT BOTTOM OF SOIL MEDIA.
3. ORIFICE TO BE CUT WITH EDGES CLEAN SMOOTH AND SANDED WITH NO BURS OR IRREGULARITIES PRESENT AND GROUND SO THAT FLOW THROUGH IS SMOOTH.

NOTES:
1. GCL MAY BE CLAY BOUND WITH ADHESIVE TO UPPER AND LOWER GEOTEXTILES, CLAY STITCHBONDED BETWEEN UPPER AND LOWER GEOTEXTILES, OR CLAY NEEDLEPUNCHED THROUGH UPPER AND LOWER GEOTEXTILES.
2. INSTALL PER MANUFACTURER'S INSTRUCTIONS.

N.T.S.

BOGIA ENGINEERING INC.
1340 PENN AVE WYOMISSING, PA 19610
PHONE: 610-678-3071 - FAX: 610-678-3517
WWW.BOGIAENG.COM

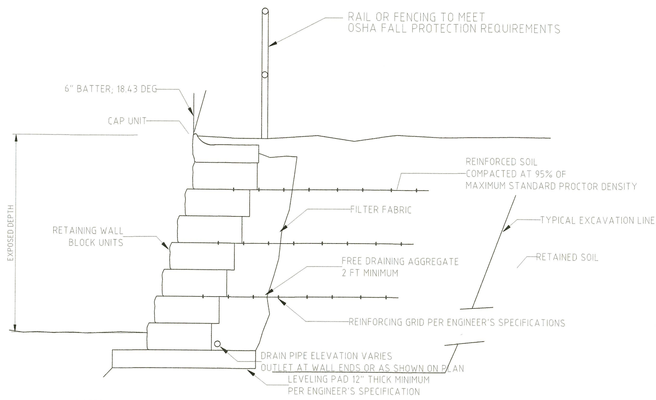
PRELIMINARY & FINAL
EASTON COMMERCE PARK
CONSTRUCTION DETAILS A

DATE	REVISION
2024-10-30	PER PDEP COMMENTS & BOROUGH LETTER
2024-09-06	PER REVIEW COMMENTS
2024-08-05	PER LAPC & BOROUGH COMMENTS

COPYRIGHT 2024, BOGIA ENGINEERING INC.

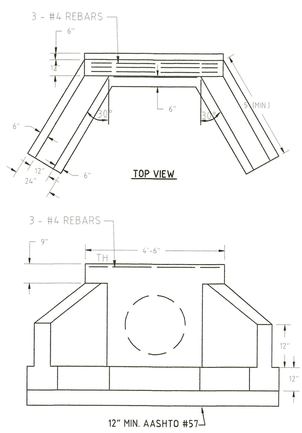
EASTON WOOD AVE PropCO LLC	
8801RIVER CROSSING Blvd	
INDIANAPOLIS, IN 46240	
JOB:	EASTON COMMERCE PARK
	Wilson Borough
	Palmer Twp & City of Easton
	NORTHAMPTON County, PA
PIN:	CHECK SHEET C-100
CHECKED BY:	DH
DRAWN BY:	CF
DATE:	11/01/2024
SCALE:	N.T.S.
DRAWING:	C-110 A
PROJECT:	2022-528
SHEET:	46 OF 53

PROJECT TITLE: EASTON COMMERCE PARK

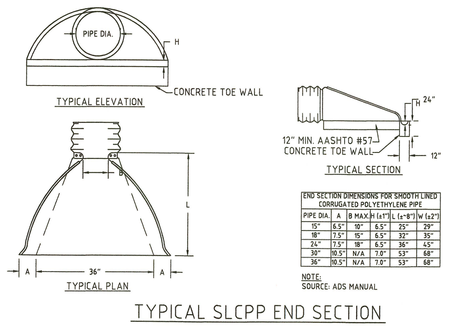


NOTES:
1. SURFACE MATERIAL AND COLOR TREATMENT TO BE APPROVED BY ARCHITECT.
2. PROVIDE RAILING OR FENCING ALONG TOP EDGE OF WALL FOR SAFETY.
3. THE DESIGN OF WALLS MUST BE SEALED BY A PROFESSIONAL ENGINEER REGISTERED IN THE COMMONWEALTH OF PENNSYLVANIA.
4. PEDESTRIAN BARRIER SHALL BE PROVIDED ALONG THE TOP OF ALL WALLS.
5. WALL TO BE DESIGNED TO "BRIDGE" ACROSS ALL STORM SEWER PIPES SO ADDITIONAL LOAD FROM WALL OR FILL IT RETAINS IS NOT IMPOSED ON THE PIPES.
6. WILSON BOROUGH AND CITY OF EASTON APPROVAL OF DESIGN DETAILS SEALED BY A PROFESSIONAL ENGINEER REGISTERED IN THE COMMONWEALTH OF PENNSYLVANIA IS REQUIRED PRIOR TO CONSTRUCTION.
7. WALL IS TYPICAL SECTION. ADDITIONAL INFORMATION MAY BE NECESSARY FOR CONSTRUCTION OR DIFFERENT WALL DESIGN PROVIDED DEPENDING ON SITE CONDITIONS.

SEGMENTAL BLOCK RETAINING WALL
(PROVIDED AS EXAMPLE, SEE NOTE 7)



ENDWALL (TYPE DW)

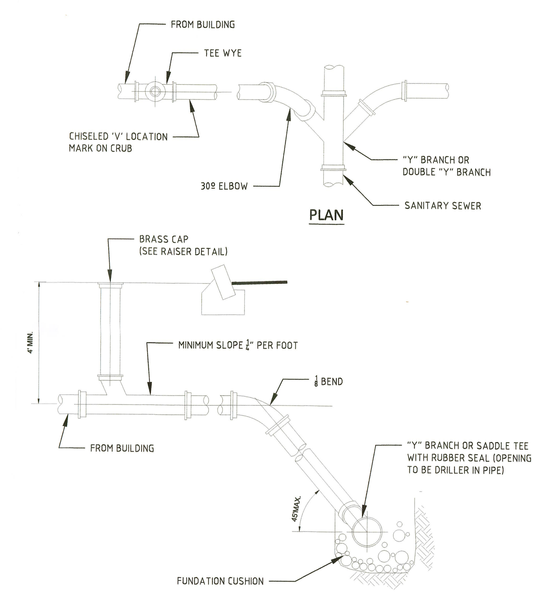


DIE SECTION DIMENSIONS FOR CORRUGATED CORRUGATED POLYETHYLENE PIPE

PIPE DIA.	A	B MAX	H (±1")	L (±18")	W (±2")
10"	8.5"	15"	8.5"	33"	29"
18"	13.5"	15"	8.5"	33"	35"
24"	17.5"	18"	8.5"	36"	45"
30"	20.5"	N/A	13"	53"	68"
36"	39.5"	N/A	13"	53"	68"

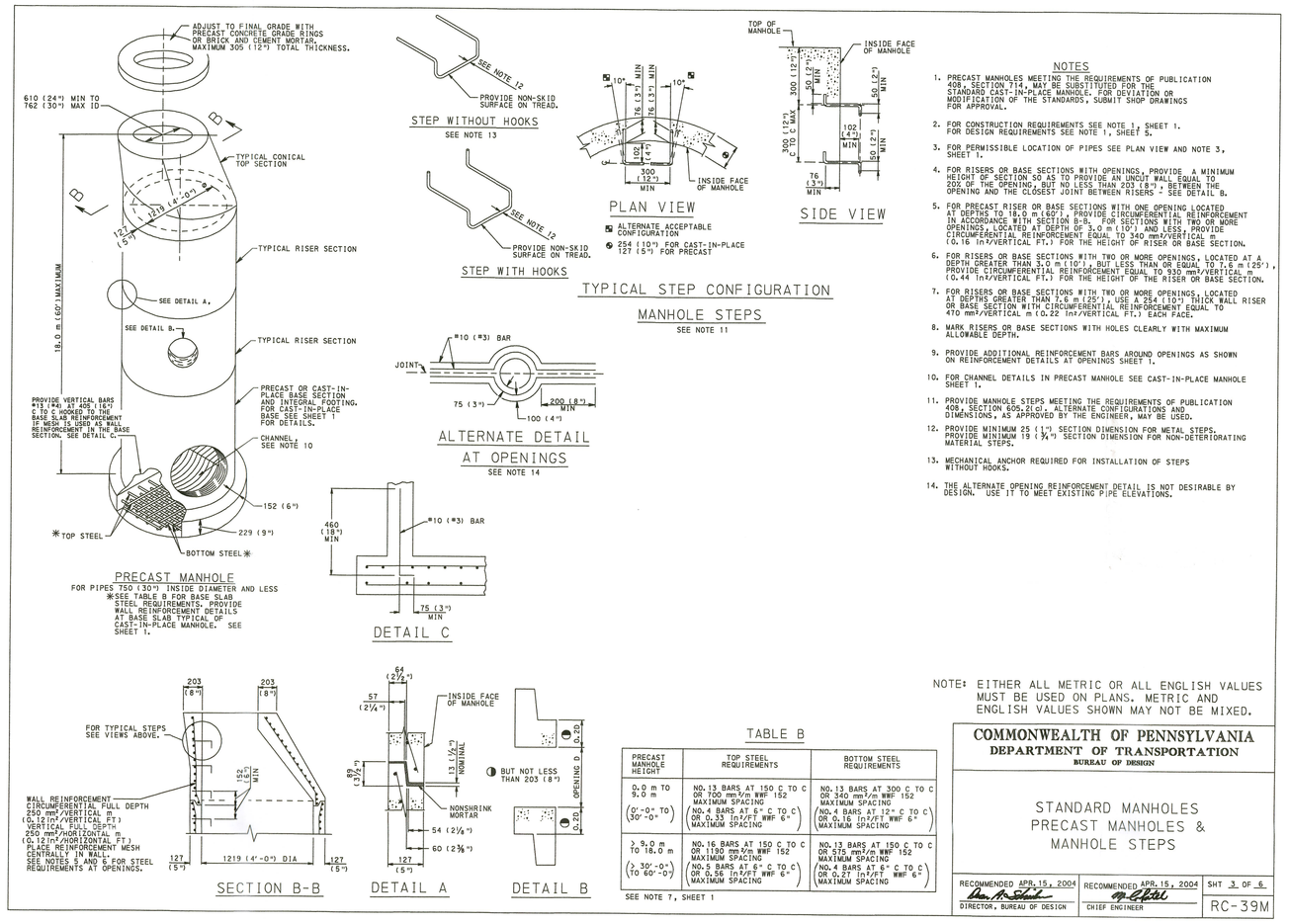
NOTE:
SOURCE: ADS MANUAL

TYPICAL SLCPP END SECTION



NOTE:
1. REFER TO UTILITY PLAN FOR PIPES SIZES, VERIFY WITH ARCHITECTURAL PLANS.
2. CONTACT ENGINEER WITH ANY CONFLICTS PRIOR TO ANY SEWER CONNECTION WORK.

STANDARD CONNECTION DETAIL PER WILSON BOROUGH AND CITY OF EASTON



NOTES
1. PRECAST MANHOLES MEETING THE REQUIREMENTS OF PUBLICATION 408, SECTION 714, MAY BE SUBSTITUTED FOR THE STANDARD CAST-IN-PLACE MANHOLE. FOR DEVIATION OR MODIFICATION OF THE STANDARDS, SUBMIT SHOP DRAWINGS FOR APPROVAL.
2. FOR CONSTRUCTION REQUIREMENTS SEE NOTE 1, SHEET 1. FOR DESIGN REQUIREMENTS SEE NOTE 1, SHEET 5.
3. FOR PERMISSIBLE LOCATION OF PIPES SEE PLAN VIEW AND NOTE 3, SHEET 1.
4. FOR RISERS OR BASE SECTIONS WITH OPENINGS, PROVIDE A MINIMUM HEIGHT OF SECTION SO AS TO PROVIDE AN UNCUT WALL EQUAL TO 200 OF THE OPENING, BUT NO LESS THAN 203 (8") BETWEEN THE OPENING AND THE CLOSEST JOINT BETWEEN RISERS - SEE DETAIL B.
5. FOR PRECAST RISER OR BASE SECTIONS WITH ONE OPENING LOCATED AT DEPTHS TO 4.6 m (15') PROVIDE CIRCUMFERENTIAL REINFORCEMENT IN ACCORDANCE WITH SECTION B-B. FOR SECTIONS WITH TWO OR MORE OPENINGS, OR ONE OPENING AT DEPTHS GREATER THAN 4.6 m (15'), PROVIDE CIRCUMFERENTIAL REINFORCEMENT EQUAL TO 330 mm²/VERTICAL m (0.16 in²/VERTICAL FT.) FOR THE HEIGHT OF RISER OR BASE SECTION.
6. FOR RISERS OR BASE SECTIONS WITH TWO OR MORE OPENINGS, LOCATED AT A DEPTH GREATER THAN 4.6 m (15'), BUT LESS THAN 7.6 m (25'), USE A 254 (10") THICK WALL RISER OR BASE SECTION WITH CIRCUMFERENTIAL REINFORCEMENT EQUAL TO 660 mm²/VERTICAL m (0.32 in²/VERTICAL FT.) EACH FACE.
7. FOR RISERS OR BASE SECTIONS WITH ONE OPENING LOCATED AT DEPTHS GREATER THAN 7.6 m (25'), USE A 254 (10") THICK WALL RISER OR BASE SECTION WITH CIRCUMFERENTIAL REINFORCEMENT EQUAL TO 410 mm²/VERTICAL m (0.22 in²/VERTICAL FT.) EACH FACE.
8. MARK RISERS OR BASE SECTIONS WITH HOLES CLEARLY WITH MAXIMUM ALLOWABLE DEPTH.
9. PROVIDE ADDITIONAL REINFORCEMENT BARS AROUND OPENINGS AS SHOWN ON REINFORCEMENT DETAILS AT OPENINGS SHEET 7.
10. FOR CHANNEL DETAILS IN PRECAST MANHOLE SEE CAST-IN-PLACE MANHOLE SHEET 5.
11. PROVIDE MANHOLE STEPS MEETING THE REQUIREMENTS OF PUBLICATION 408, SECTION 605.2(c), ALTERNATE CONFIGURATIONS AND DIMENSIONS, AS APPROVED BY THE ENGINEER, MAY BE USED.
12. PROVIDE MINIMUM 25 (1") SECTION DIMENSION FOR METAL STEPS. PROVIDE MINIMUM 19 (¾") SECTION DIMENSION FOR NON-DETERIORATING MATERIAL STEPS.
13. MECHANICAL ANCHOR REQUIRED FOR INSTALLATION OF STEPS WITHOUT HOOKS.
14. THE ALTERNATE OPENING REINFORCEMENT DETAIL IS NOT DESIRABLE BY DESIGN. USE IT TO MEET EXISTING PIPE ELEVATIONS.

TABLE B

PRECAST MANHOLE HEIGHT	TOP STEEL REQUIREMENTS	BOTTOM STEEL REQUIREMENTS
D.D m TO 9.0 m (30'-0")	NO. 13 BARS AT 150 C. TO C OR 1200 mm²/m WWF 152 MAXIMUM SPACING. (NO. 4 BARS AT 6" C. TO C) OR 0.33 in²/FT WWF 6" MAXIMUM SPACING	NO. 13 BARS AT 300 C. TO C OR 600 mm²/m WWF 152 MAXIMUM SPACING. (NO. 4 BARS AT 12" C. TO C) OR 0.16 in²/FT WWF 6" MAXIMUM SPACING
> 9.0 m TO 16.0 m (> 30'-0") (TO 60'-0")	NO. 16 BARS AT 150 C. TO C OR 1700 mm²/m WWF 152 MAXIMUM SPACING. (NO. 5 BARS AT 6" C. TO C) OR 0.46 in²/FT WWF 6" MAXIMUM SPACING	NO. 13 BARS AT 150 C. TO C OR 1200 mm²/m WWF 152 MAXIMUM SPACING. (NO. 4 BARS AT 6" C. TO C) OR 0.27 in²/FT WWF 6" MAXIMUM SPACING

SEE NOTE 7, SHEET 1

NOTE: EITHER ALL METRIC OR ALL ENGLISH VALUES MUST BE USED ON PLANS. METRIC AND ENGLISH VALUES SHOWN MAY NOT BE MIXED.

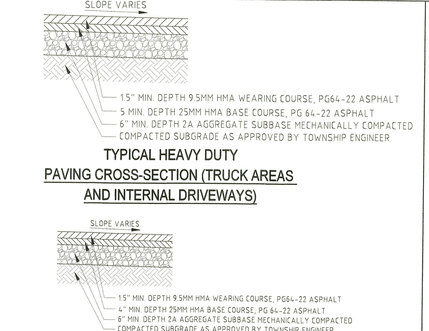
COMMONWEALTH OF PENNSYLVANIA
DEPARTMENT OF TRANSPORTATION
BUREAU OF DESIGN

STANDARD MANHOLES
PRECAST MANHOLES & MANHOLE STEPS

RECOMMENDED APR. 15, 2004
DIRECTOR, BUREAU OF DESIGN

RECOMMENDED APR. 15, 2004
CHIEF ENGINEER

SHT 3 OF 6
RC-39M

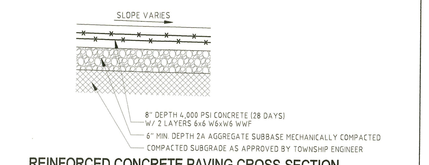


TYPICAL HEAVY DUTY PAVING CROSS-SECTION (TRUCK AREAS AND INTERNAL DRIVEWAYS)



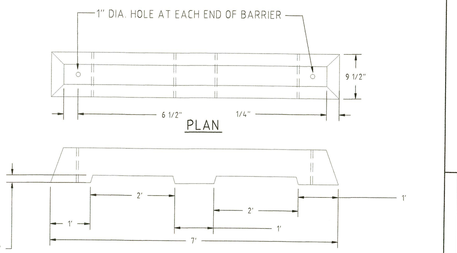
TYPICAL LIGHT DUTY PAVING CROSS-SECTION (PARKING SPACES AND PARKING AISLES)

PAVING NOTE:
SUBGRADE SHALL BE COMPACTED IN ACCORDANCE WITH SPECIFICATIONS OF PADOT PUBLICATION 408, LATEST EDITION. WHERE PARKING AREA(S) ARE TO BE USED FOR INFILTRATION PRACTICES, SUBGRADE SHALL NOT BE COMPACTED AND IT SHALL BE PROTECTED FROM COMPACTION FROM CONSTRUCTION EQUIPMENT, TRAFFIC, STORAGE OF MATERIALS, ETC. TO PRESERVE INFILTRATION CAPACITY OF SUBGRADE SOILS.



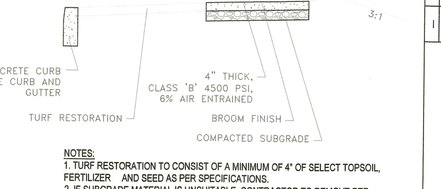
REINFORCED CONCRETE PAVING CROSS-SECTION

PAVING NOTE:
ROAD TO BE CONSTRUCTED TO FOLLOW PENNDOT SPECIFICATIONS FOR CONCRETE PAVING, INCLUDING BUT NOT LIMITED TO PUB. 72M, RC-20M AND RC-21M AS WELL AS PUB. 408.



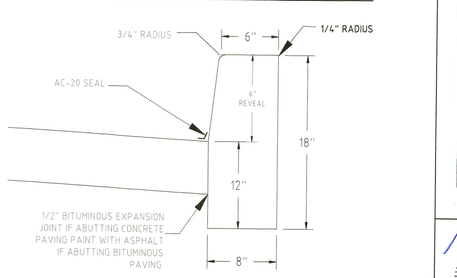
NOTES:
1. DIMENSIONS SHOWN ARE APPROXIMATE.
2. USE WHEEL STOPS AS MANUFACTURED BY: READING PRECAST OR APPROVED EQUAL
3. SECURE WHEEL STOP WITH ⅝" #5 REBAR DRIVEN FLUSH WITH TOP OF WHEEL STOP
4. PLACE WHEEL STOP WITH THE NEAREST EDGE 2' FROM EDGE OF PAVING OR CURB
5. WHEEL STOPS TO BE PLACED AT ENDS OF ALL PARKING SPACES NOT ABUTTING CURB.

CONCRETE WHEEL STOP



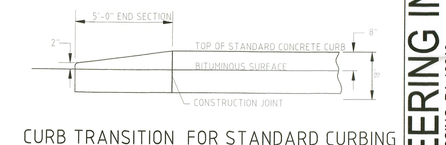
NOTES:
1. TURF RESTORATION TO CONSIST OF A MINIMUM OF 4" OF SELECT TOPSOIL, FERTILIZER AND SEED AS PER SPECIFICATIONS.
2. IF SUBGRADE MATERIAL IS UNSUITABLE, CONTRACTOR TO REMOVE PER COUNTY ENGINEER'S DISCRETION AND REPLACE WITH SELECT FILL AT NO EXTRA COST TO THE COUNTY.
3. SIDEWALK WIDTH SHALL BE 4'-0" MINIMUM UNLESS OTHERWISE NOTED ON THE APPROVED PLANS.
4. CONCRETE SHALL BE CLASS B WITH 28 DAY COMPRESSIVE STRENGTH OF 4500 PSI 6% ±1.5% AIR ENTRAINMENT.

STANDARD CONCRETE SIDEWALK

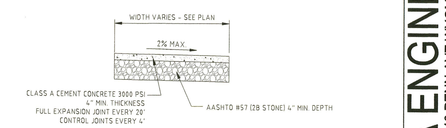


NOTES:
1. PENNDOT PUBLICATION 408, CLASS A CEMENT CONCRETE IS REQUIRED.
2. APPROVED PREMOLDED EXPANSION JOINTS TO BE SPACED EVERY 20 FEET MAX.
3. CONTRACTION JOINTS ARE TO BE SPACED EVERY 10 FEET.

6" CONCRETE CURB

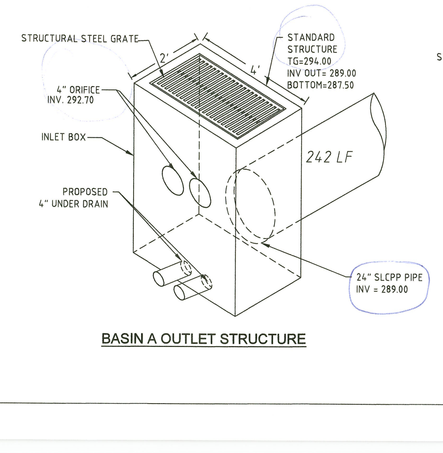


CURB TRANSITION FOR STANDARD CURBING



SIDEWALK CROSS-SECTION

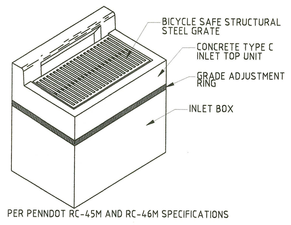
NOTE:
- ALL CONSTRUCTION DETAILS ARE TO BE IN ACCORDANCE WITH THE WILSON BOROUGH AND CITY OF EASTON DESIGN DETAILS AND PRACTICES, SUBDIVISION AND LAND DEVELOPMENT ORDINANCE. ALL CONSTRUCTION DETAILS ARE TO ALSO REFERENCE LATEST VERSION OF PENNDOT PUBLICATION 408.
- ALL SIGNAGE SHALL COMPLY WITH THE REQUIREMENTS OF THE WILSON BOROUGH AND CITY OF EASTON ZONING ORDINANCE.



CLEANOUT DETAIL

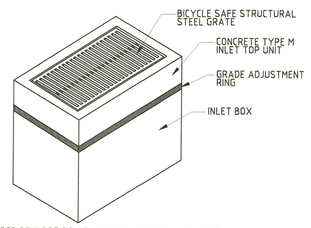
NOTES:
1. ALL CONNECTIONS IN MANIFOLD, AT CLEANOUTS AND AT OUTLET TO BE WITH 45° ELBOWS.
2. INVERT OF PERFORATED PIPE TO BE AT INVERT OF BASIN AT THE BOTTOM OF THE BIO-RETENTION MEDIA.
3. SOLVENT WELD ALL JOINTS.

PVC UNDERDRAIN DETAIL



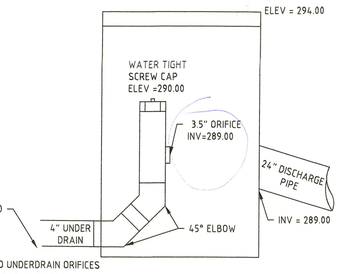
PER PENNDOT RC-45M AND RC-46M SPECIFICATIONS

TYPE C INLET



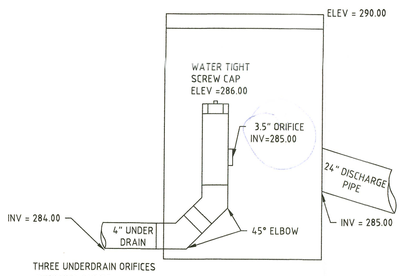
PER PENNDOT RC-45M AND RC-46M SPECIFICATIONS

TYPE M INLET



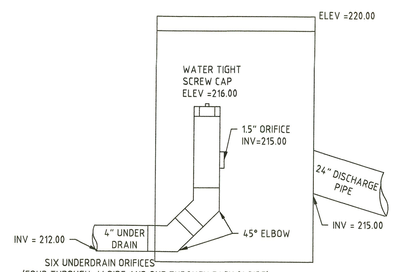
BASIN A UNDER DRAIN

NOTES:
1. ALL BENDS TO BE WITH 45° ELBOWS MAX.
2. UNDER DRAIN TO BE AT BOTTOM OF SOIL MEDIA.
3. ORIFICE TO BE CUT WITH EDGES CLEAN SMOOTH AND SANDED WITH NO BURS OR IRREGULARITIES PRESENT AND GROUND SO THAT FLOW THROUGH IS SMOOTH.



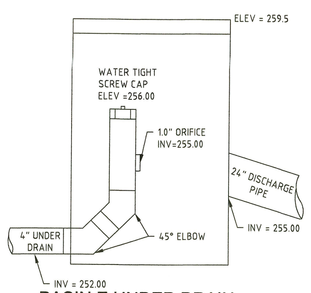
BASIN B UNDER DRAIN

NOTES:
1. ALL BENDS TO BE WITH 45° ELBOWS MAX.
2. UNDER DRAIN TO BE AT BOTTOM OF SOIL MEDIA.
3. ORIFICE TO BE CUT WITH EDGES CLEAN SMOOTH AND SANDED WITH NO BURS OR IRREGULARITIES PRESENT AND GROUND SO THAT FLOW THROUGH IS SMOOTH.



MRC BASIN C UNDER DRAIN

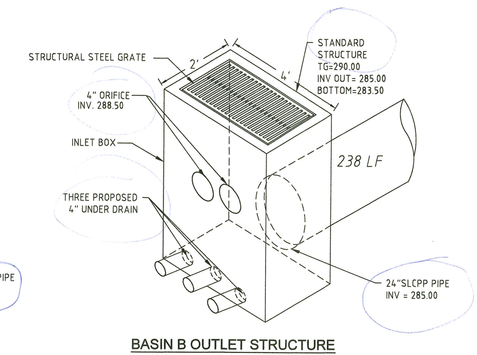
NOTES:
1. ALL BENDS TO BE WITH 45° ELBOWS MAX
2. UNDER DRAIN TO BE AT BOTTOM OF SOIL MEDIA.
3. ORIFICE TO BE CUT WITH EDGES CLEAN SMOOTH AND SANDED WITH NO BURS OR IRREGULARITIES PRESENT AND GROUND SO THAT FLOW THROUGH IS SMOOTH.



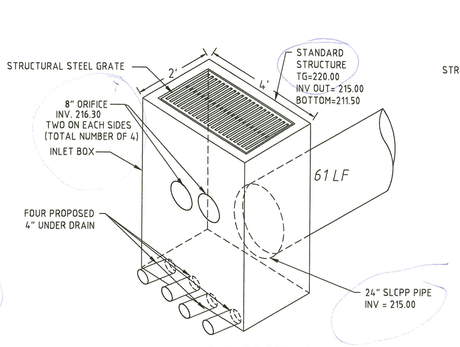
BASIN E UNDER DRAIN

NOTES:
1. ALL BENDS TO BE WITH 45° ELBOWS MAX
2. UNDER DRAIN TO BE AT BOTTOM OF SOIL MEDIA.
3. ORIFICE TO BE CUT WITH EDGES CLEAN SMOOTH AND SANDED WITH NO BURS OR IRREGULARITIES PRESENT AND GROUND SO THAT FLOW THROUGH IS SMOOTH.

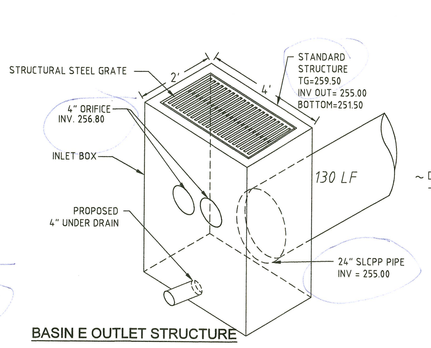
BASIN A OUTLET STRUCTURE



BASIN B OUTLET STRUCTURE

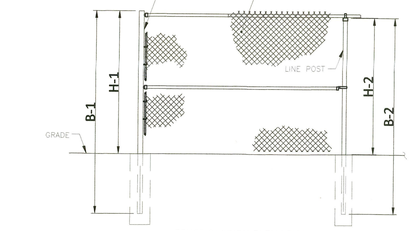


MRC BASIN C OUTLET STRUCTURE



BASIN E OUTLET STRUCTURE

BASIN E OUTLET STRUCTURE

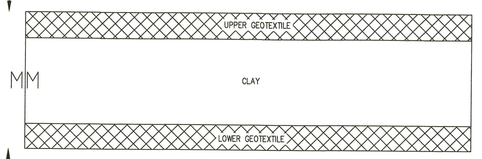


FENCE SECTION ELEVATION

FENCE HEIGHT	END & CORNER POSTS		LINE POSTS	
NOMINAL HEIGHT	B-1 BAR LENGTH	H-1 HEIGHT ABOVE GRADE	B-2 BAR LENGTH	H-2 HEIGHT ABOVE GRADE
7'-0" [2134MM]	10'-0" [3048MM]	7'-0 5/8" [2150MM]	9'-8" [2946MM]	6'-8 7/8" [2054MM]

NOTES:
1. CHAIN LINK FENCE TO INCLUDE POLYETHYLENE THERMOPLASTIC PRIVACY SLATS TO PROVIDE A VISUAL SCREEN ALONG REFUSE COLLECTION AREAS. NO PRIVACY SLATS FOR PERIMETER FENCING REQUIRED UNLESS SPECIFIED BY OWNER. ARCHITECT TO SPECIFY COLOR.
2. AS MANUFACTURED BY MASTER HALCO (WWW.FENCEONLINE.COM) OR APPROVED EQUAL
3. PERIMETER FENCING IS PROHIBITED FROM HAVING BARBED WIRE PER ZONING ORDINANCE SECTION 209-37(A)

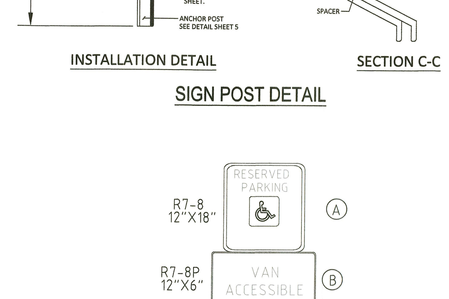
FENCE DETAIL



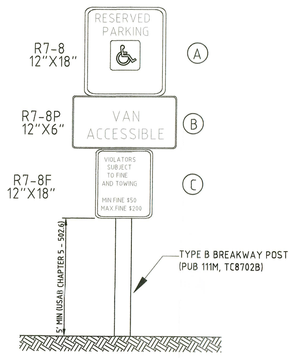
GCL CROSS SECTION

NOTES:
1. GCL MAY BE CLAY BOUND WITH ADHESIVE TO UPPER AND LOWER GEOTEXTILES, CLAY STITCHBONDED BETWEEN UPPER AND LOWER GEOTEXTILES, OR CLAY NEEDLEPUNCHED THROUGH UPPER AND LOWER GEOTEXTILES.
2. INSTALL PER MANUFACTURER'S INSTRUCTIONS.

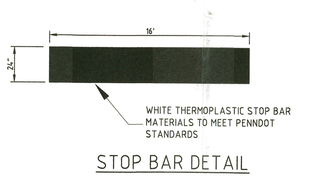
GEOSYNTHETIC CLAY LINER (GCL)
N.T.S.



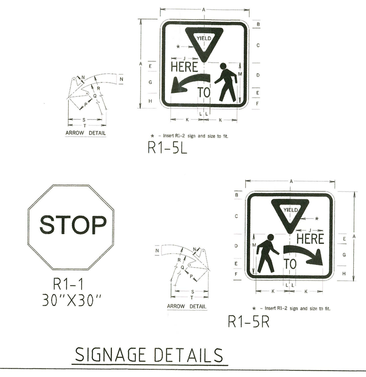
SIGN POST DETAIL



TYPICAL ADA SIGN DETAIL



STOP BAR DETAIL



SIGNAGE DETAILS

BOGIA ENGINEERING INC.
1340 PENN AVE WYOMISSING, PA 19610
PHONE 610-678-3071 - FAX: 610-678-3517
WWW.BOGIAENG.COM

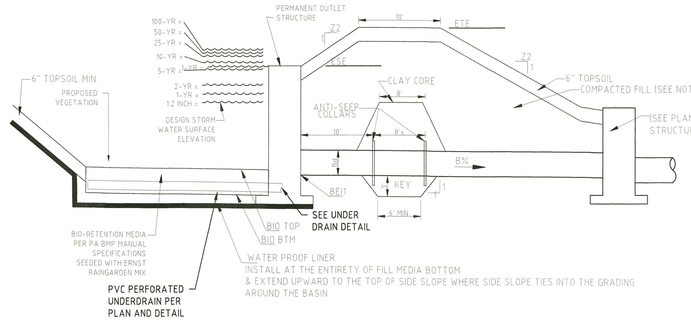
PRELIMINARY & FINAL
EASTON COMMERCE PARK
CONSTRUCTION DETAILS A

SHEETS	DATE	REVISIONS
	2024-10-28	PER ESP COMMENTS & BOROUGH LETTER
	2024-09-09	PER BOROUGH COMMENTS
	2024-07-15	PER LSPC, BOROUGH, & CITY COMMENTS
	[illegible]	INITIATION

COPYRIGHT 2025, BOGIA ENGINEERING INC.

EASTON WOOD AVE PropCO LLC	
8801 RIVER CROSSING Blvd	
INDIANAPOLIS, IN 46240	
JOB: EASTON COMMERCE PARK	
Wilson Borough	
Palmer Twp & City of Easton	
NORTHAMPTON County, PA	
PIN:	CHECK SHEET C-100
CHECKED BY:	DH
DRAWN BY:	CF
DATE:	11/01/2024
SCALE:	N.T.S.
DRAWING:	C-110 A
PROJECT:	2022-528
SHEET:	46 OF 53

PROJECT TITLE: EASTON COMMERCE PARK



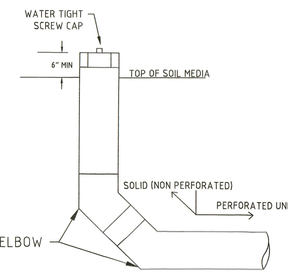
BASIN	Z_1	Z_2	BERM: TOP ELEV (FT)	BERM: ESE SPILL ELEV (FT)	PERM STRUCTURE: CREST ELEV. (FT)	BARREL: # OF PIPES	BARREL: PIPE DIA. (INCH)	BARREL: MAT'L	BARREL: SLOPE (%)	BARREL: INLET ELEV (FT)	BARREL: OUTLET ELEV (FT)	BIO-RETENTION | STORM WATER SURFACE ELEV: BIO TOP ELEV (FT)	BIO BTM ELEV (FT)	1YR	2YR	5YR	10 YR	25 YR	50 YR	100 YR	12 INCH
A	3	3	296.00	-	294.00	2	24	CPP	10.0	289.00	289.00	293.00	291.00	292.39	292.80	293.19	293.60	293.92	294.39	-	
B	3	3	292.00	290.50	290.00	2	24	CPP	1.0	286.91	286.91	289.00	287.00	287.88	288.05	288.19	288.34	288.46	288.61	288.72	-
C	3	3	217.88	222.00	220.00	2	24	CPP	1.0	214.00	214.00	216.00	214.00	214.75	215.00	215.25	215.50	215.70	215.95	216.15	-
E	3	3	255.00	259.50	257.00	2	24	CPP	1.0	252.00	252.00	254.00	252.00	252.75	253.00	253.25	253.50	253.70	253.95	254.15	-
TWENTY RD	3	3	235.00	-	233.00	2	24	CPP	1.0	230.00	230.00	232.00	230.00	230.75	231.00	231.25	231.50	231.70	231.95	232.15	-

LINED RAIN GARDEN/BIORETENTION BASIN

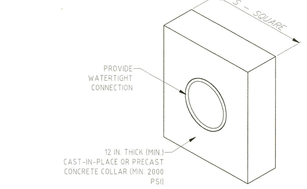
The basin bottom will be comprised of 70-80% quality topsoil combined with 20-30% compost. Quality topsoil shall consist of friable surface soil reasonably free of grass, roots, weeds, sticks, stones, or other foreign materials. The topsoil shall consist of sandy loam, with soil particles within the following percentages: clay; 0-25; silt; 25-50; sand; 50-70; decomposed organic matter; 5-10."

NOTES FOR RAIN GARDEN/BIORETENTION BASIN CONSTRUCTION:

1. EMBANKMENT MATERIAL SHALL CONSIST OF SUITABLE MATERIAL FREE OF ALL ROOTS, SOD, FROZEN SOIL, ROCKS LARGER THAN 4" IN DIAMETER AND ANY OTHER MATERIAL NOT APPROVED BY THE ENGINEER. FILL SHALL BE COMPACTED IN 8" LOOSE LIFTS TO 95% OF MAXIMUM DRY DENSITY AS PER ASTM D-1557 (MODIFIED PROCTOR). PRIOR TO PLACEMENT OF LIFT, THE SURFACE OF EXISTING MATERIAL SHALL BE SCARIFIED TO PROVIDE BONDING OF LIFTS.
2. COMPACTED FILL SHALL BE PLACED BEYOND THE FINAL LIMITS OF THE EMBANKMENT AND THEN TRIMMED TO THE FINAL DESIGN SHAPE (ALLOWING FOR TOPSOIL PLACEMENT).
3. AFTER SITE IS PERMANENTLY STABILIZED, REMOVE SEDIMENT, REPAIR LINER IF NECESSARY, INSTALL UNDERDRAINS AND FILL WITH BIO RETENTION MEDIA AND PERMANENTLY STABILIZE PER SEEDING AND MULCHING SPECIFICATIONS.
4. OUTLET PIPE SHALL MEET SPECIFICATIONS IN THE STORM SEWER NOTES ON THE GRADING & UTILITY PLAN. DO NOT PROVIDE STONE BEDDING FOR OUTLET PIPING.
5. CONSTRUCT THE EMBANKMENT 6" HIGHER THAN SHOWN ON THE DRAWINGS TO ALLOW FOR SETTLEMENT.
6. THE KEY TRENCH MATERIAL SHALL BE COMPACTED, RELATIVELY IMPERVIOUS MATERIAL (UNIFIED SOIL CLASSIFICATION CL OR ML)
7. THE CORE AND KEY TRENCH ARE TO BE COMPACTED TO 95% MODIFIED PROCTOR COMPACTION REQUIREMENTS.
8. THE ONSITE GEOTECHNICAL ENGINEER SHALL IDENTIFY SUITABLE MATERIAL FOR USE IN BERM, CORE, AND KEY TRENCH.
9. SUBGRADE MATERIALS SHOULD NOT CONTAIN SHARP, ANGULAR STONES OR ANY OBJECTS THAT COULD DAMAGE THE LINER OR ADVERSELY IMPACT ITS FUNCTION.
10. LINER MATERIAL IS GEOSYNTHETIC CLAY WITH A MINIMUM OF 0.75 LBS./SQUARE FOOT STRENGTH.
11. GEOSYNTHETIC CLAY LINER (GCL) SHALL MEET THE CRITERIA IN NRCS, PART 642, CHAPTER 3, "MATERIAL SPECIFICATION 595–GEOSYNTHETIC CLAY LINER."



CLEANOUT DETAIL

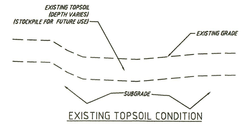


Basin	Embankment Invert	Riser Crest	y (Ft)	z	Pipe Slope	L_1 (Ft)	# of collars	Collar Projection* (Ft)	Barrel O.D. (Ft.)	Collar Size (Square)
A	290.00	294.00	4.00	3	0.0240	31.0	2	1.2	2.00	4' - 2"
B	284.00	290.00	6.00	3	0.0400	50.0	2	1.9	2.00	5' - 11"
C	214.00	220.00	6.00	3	0.0500	52.5	2	2	2.00	6' - 0"
E	255.00	259.50	4.50	3	0.0540	40.2	2	1.5	2.00	5' - 6"

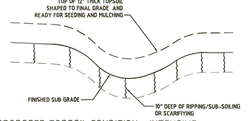
NOTES:
- ALL COLLARS SHALL BE INSTALLED SO AS TO BE WATERTIGHT
- COLLAR SIZE AND SPACING SHALL BE AS INDICATED WITHIN TABLE

STANDARD CONSTRUCTION DETAIL #7-16
CONCRETE ANTI-SEEP COLLAR FOR PERMANENT BASINS OR TRAPS

N.T.S.



EXISTING TOPSOIL CONDITION



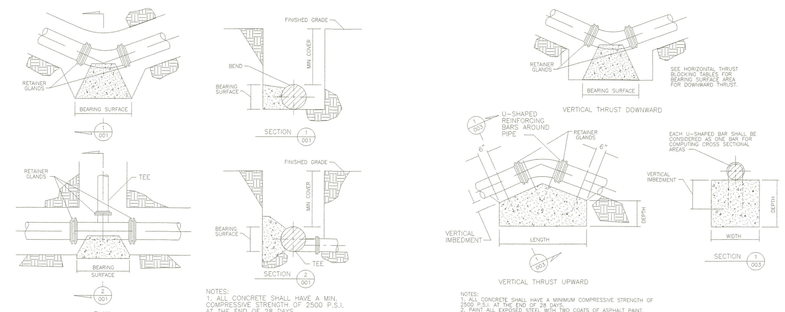
PROPOSED TOPSOIL CONDITION – INTENSIVE

SOIL AMENDMENT DETAILS

FOR AREAS CLASSIFIED AS SOIL AMENDMENT AREAS:

1. PRIOR TO TOPSOILING, SCARIFY OR RIP SOIL TO A DEPTH OF 10". RIPPING OR SCARIFICATION METHOD SHALL BE A SOLID SHANK RIPPER USING MULTIPLE PASSES TO ACHIEVE THE SPECIFIED DEPTH FOR RELIEF OF SOIL COMPACTION.
2. SOIL AMENDMENT MIXTURE AS FOLLOWS:
   - 50% SITE TOPSOIL
   - 40% COMPOST* •
   - 10% SAND PASSING #8 SIEVE
3. PLACE SOIL AMENDMENT MIXTURE TO A DEPTH OF 8" FOR STANDARD SOIL AMENDMENT AREAS, PLACE 12" SOIL AMENDMENT MIXTURE IN INTENSIVE SOIL AMENDMENT AREAS.
4. USE OF HEAVY MACHINERY IS PROHIBITED DURING SOIL AMENDMENT PHASE OF CONSTRUCTION.
5. SOIL AMENDMENTS TO BE PERFORMED AFTER CONSTRUCTION IS COMPLETED AND HEAVY MACHINERY WILL NOT TRAVERSE THE SOIL AMENDMENT AREAS.

* COMPOST REQUIREMENTS:
- A. COMPOST PRODUCTS SPECIFIED FOR USE IN THIS APPLICATION ARE DESCRIBED IN TABLE 1 BELOW. THE PRODUCT'S PARAMETERS WILL VARY BASED ON WHETHER VEGETATION WILL BE ESTABLISHED ON THE TREATED SLOPE.
- B. ONLY COMPOST PRODUCTS THAT MEET ALL APPLICABLE STATE AND FEDERAL REGULATIONS PERTAINING TO ITS PRODUCTION AND DISTRIBUTION MAY BE USED IN THIS APPLICATION. APPROVED COMPOST PRODUCTS MUST MEET RELATED STATE AND FEDERAL CHEMICAL CONTAMINANT (E.G. HEAVY METALS, PESTICIDES, ETC.) AND PATHOGEN LIMIT STANDARDS PERTAINING TO THE FEEDSTOCKS (SOURCE MATERIALS) IN WHICH IT IS DERIVED.
- C. VERY COARSE COMPOST SHOULD BE AVOIDED FOR SOIL AMENDMENT AS IT WILL MAKE PLANTING AND CROP ESTABLISHMENT MORE DIFFICULT.
- D. THE USE OF COMPOST PRODUCTS THAT ARE CERTIFIED BY THE U.S. COMPOSTING COUNCIL'S SEAL OF TESTING ASSURANCE (STA) PROGRAM (WWW.COMPOSTINGCOUNCIL.ORG) ARE REQUIRED.



PIPE SIZES	6" AND 8"			10" AND 12"		
TYPE OF SOIL/ASSUMED MATERIAL AND ALLOWABLE LOAD	DEGREE BEND OR DEFLECTION			DEGREE BEND OR DEFLECTION		
	11 1/4°	22 1/2°	45°	90°	11 1/4°	22 1/2°	45°	90°
SOFT CLAY 1 TON/SQ.FT.	1.00	3.00	6.00	12.00	1.00	4.00	12.00	24.00
SAND, GRAVEL OR GRAVEL/CLAY 2 TON/SQ.FT.	1.00	1.50	3.00	6.00	1.00	2.00	6.00	12.00
CLAY 3 TON/SQ.FT.	1.00	1.00	2.00	4.00	1.00	2.00	4.00	8.00
SOFT ROCK 5 TON/SQ.FT.	1.00	1.00	1.00	2.50	1.00	1.00	2.50	5.00
ROCK 20 TON/SQ.FT.	1.00	1.00	1.00	1.00	1.00	1.00	1.00	1.00

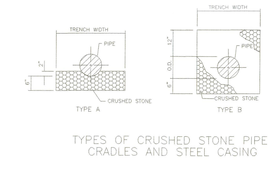
PIPE SIZES	14" AND 16"			
TYPE OF BEARING MATERIAL AND ALLOWABLE LOAD	DEGREE BEND OR DEFLECTION			
	11 1/4°	22 1/2°	45°	90°
SAND & CLAY/SILT, SAND & CLAY 2 TON/SQ.FT.	5.00	11.00	21.00	43.00
CLAY 3 TON/SQ.FT.	2.00	3.50	7.00	14.00
SOFT ROCK 5 TON/SQ.FT.	1.00	2.00	4.00	8.00
ROCK 20 TON/SQ.FT.	1.00	1.00	1.00	2.00

NOTE: BEARING SURFACE AREAS SHOWN ARE MINIMUM FOR THE VARIOUS PIPE SIZES.

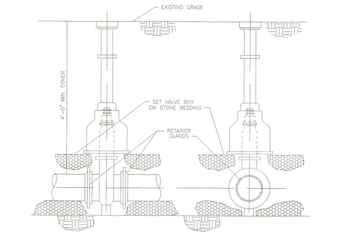
HORIZONTAL THRUST BLOCKING AND VERTICAL THRUSTS DOWNWARD BEARING SURFACE AREA

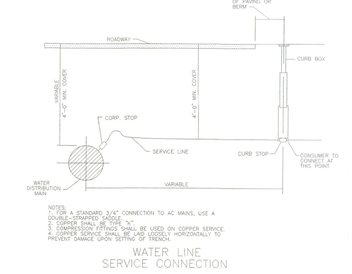
PIPE SIZE	6" AND 8"	10" AND 12"	14" AND 16"
DEGREE BEND OR DEFLECTION	11 1/4° 22 1/2° 45°	11 1/4° 22 1/2° 45°	11 1/4° 22 1/2° 45°
LENGTH	3.00 4.00 6.00	4.50 6.00 8.00	4.00 8.00 11.00
WIDTH	3.00 3.00 3.00	3.00 3.00 4.00	3.50 3.50 5.00
DEPTH	2.00 3.00 4.00	3.00 4.50 5.00	3.50 5.00 5.00
SQ. IN. REINFORING	0.17 0.33 0.65	0.37 0.74 1.48	0.66 1.32 2.63
BAR NO.	3 6 7	8 9 10	11
CROSS-SECTION AT PIPE BAR (INCHES)	0.31 0.44 0.60	0.79 1.00 1.27	1.56
	1/4" 1/4" 3/8"	3/8" 1/2" 1/2"	5/8"

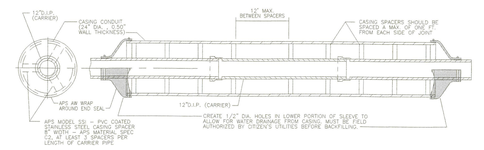
VERTICAL THRUST BLOCKING UPWARD THRUSTS SCHEDULE OF DIMENSIONS 150 P.S.I. WORKING PRESSURE

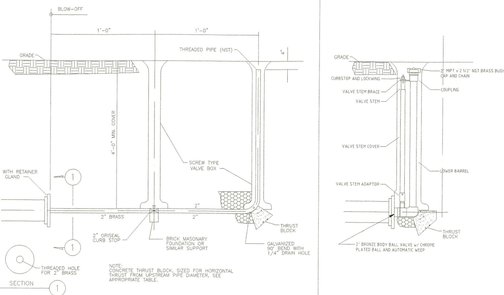


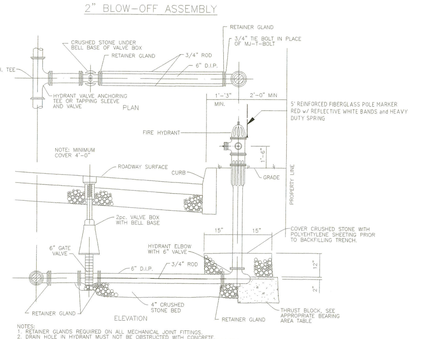
TYPES OF CRUSHED STONE PIPE CRADLES AND STEEL CASING



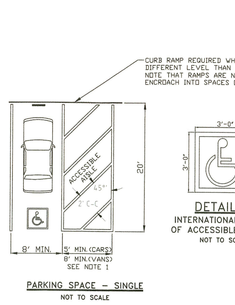








2026-10-28	PER DEP COMMENTS & BOROUGH LETTER
2026-08-06	PER BOROUGH COMMENTS
2026-06-15	PER LVNC, BOROUGH, & CITY COMMENTS
DATE	REVISION

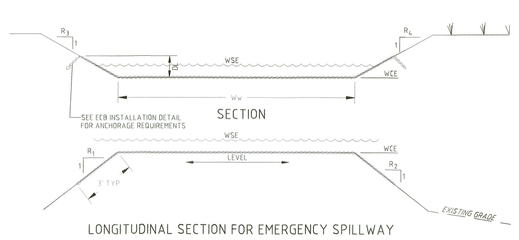


ADA STRIPING AND PAVEMENT MARKINGS

TABLE 1

Soil Texture	Ideal Bulk densities	Bulk densities that may affect root growth	Bulk densities that restrict root growth
	g/cm3	g/cm3	g/cm3
Sands, loamy sands	<1.60	1.69	1.8
Sandy loams, loams	<1.40	1.63	1.8
Sandy clay loams, loams, clay loams	<1.40	1.6	1.75
Silt, silt loams	<1.30	1.6	1.75
Silt loams, silty clay loams	<1.10	1.55	1.65
Sandy clays, silty clays, some clay loams (35-45% clay)	<1.10	1.49	1.58
Clays (>45% clay)	<1.10	1.39	1.47

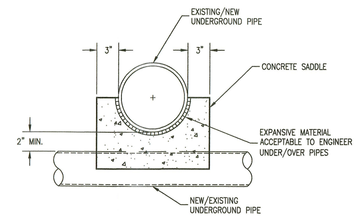
Source: Protecting Urban Soil Quality, USDA-NRCS

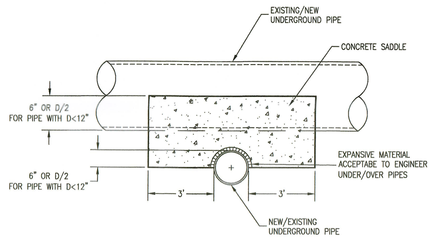


BASIN	R_1	R_2	WEIR: 100-YR SURFACE ELEV (FT)	WEIR: CREST ELEV (FT)	WEIR: WIDTH (FT)	ECB LINING: MAT'L & STAPLE PATTERN	ECB LINING: LINING DEPTH (D, (FT))	R_1	R_2	TOP OF BERM ELEV
B	3	3	286.91	290.50	100'	S75/D	0.2	3	3	292.00
C	3	3	217.88	222.00	100'	S75/D	0.2	3	3	224.00

TYPICAL EMERGENCY SPILLWAY

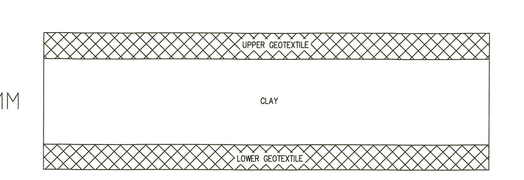
NOTES:
- BASIN A DOES NOT HAVE BERM AROUND I , THEREFORE, NO EMERGENCY SPILLWAY WAS REQUIRED.
- BASIN E EMERGENCY SPILLWAY IS TAKEN AS THE OUTLET STRUCTURE TOP OF THE GRATE. IT WAS SHOWN (IN THE PCSM REPORT) THAT THE OUTLET PIPE FROM THE STRUCTURE HAD THE SUFFICIENT CAPACITY TO SAFELY CONVEY THE 100-YR INFLOW TO THE BASIN.





NOTES:
1. INSTALL CONCRETE SADDLE AT EACH LOCATION WHERE A NEW UNDERGROUND UTILITY CROSSES AN EXISTING UNDERGROUND UTILITY WITH LESS THAN 12" CLEARANCE.
2. MINIMUM ALLOWABLE CLEARANCE IS 2".
3. USE CLASS "A" (AKA CLASS I) CONCRETE.

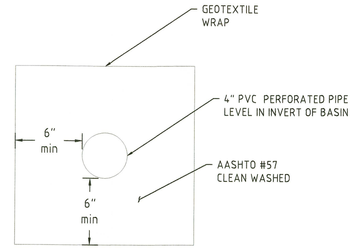
CONCRETE SADDLE DETAIL



GCL CROSS SECTION

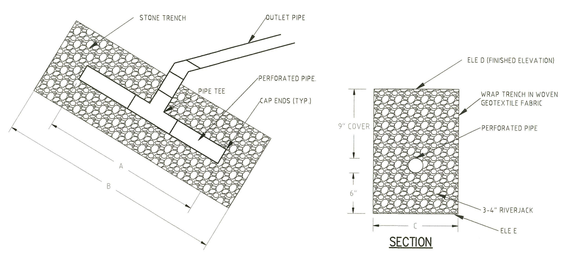
NOTES:
1. GCL MAY BE CLAY BOUND WITH ADHESIVE TO UPPER AND LOWER GEOTEXTILES, CLAY STITCHBONDED BETWEEN UPPER AND LOWER GEOTEXTILES, OR CLAY NEEDLEPUNCHED THROUGH UPPER AND LOWER GEOTEXTILES.
2. INSTALL PER MANUFACTURER'S INSTRUCTIONS. AT THE ENTIRETY OF THE FILL MEDIA BOTTOM AND THEN EXTEND TO THE TOP OF THE SIDE SLOPE, WHERE SIDE SLOPE TIES INTO THE GRADING AROUND THE BASIN.

GEOSYNTHETIC CLAY LINER (GCL)
N.T.S.



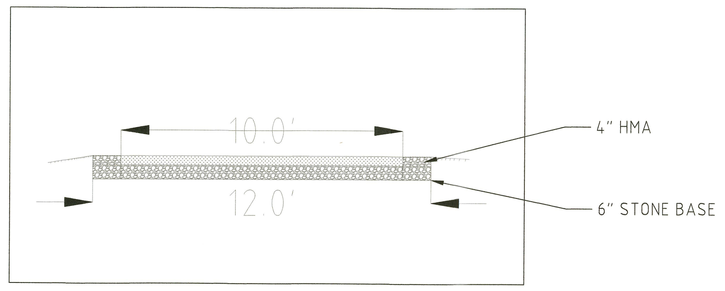
PVC UNDERDRAIN DETAIL

NOTES:
1. ALL CONNECTIONS IN MANIFOLD, AT CLEANOUTS AND AT OUTLET TO BE WITH 45° ELBOWS.
2. INVERT OF PERFORATED PIPE TO BE AT INVERT OF BASIN AT THE BOTTOM OF THE BIO-RETENTION MEDIA.
3. SOLVENT WELD ALL JOINTS.
4. ALL HORIZONTALLY INSTALLED PVC PIPES AT THE BOTTOM OF THE FILL MEDIA ARE PERFORATED WHILE THE VERTICAL SECTIONS, INCLUDING UPTURNED ELBOW WITHIN THE OUTLET BOX AND CLEANOUTS, SHOULD HAVE SOLID WALLS.

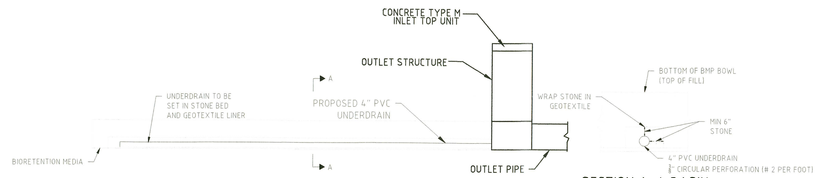


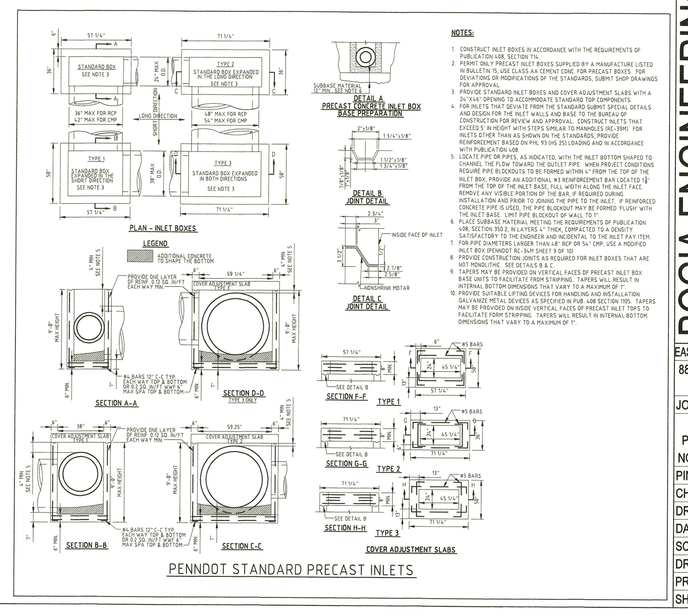
LEVEL SPREADER SPECIFICATIONS							
LEVEL SPREADER	PIPE SIZE (INCH)	PERFORATION SIZE (INCH)	# OF PERFORATION PER FOOT	A (FEET)	B (FEET)	C (INCH)	ELE D	ELE E
C	24	0.375	72	43	45	48	214	210.75
E	18	0.375	50	6.5	7.5	42	228	225.25

PERMANENT LEVEL SPREADER
N.T.S.



ASPHALT TRAIL CROSS-SECTION



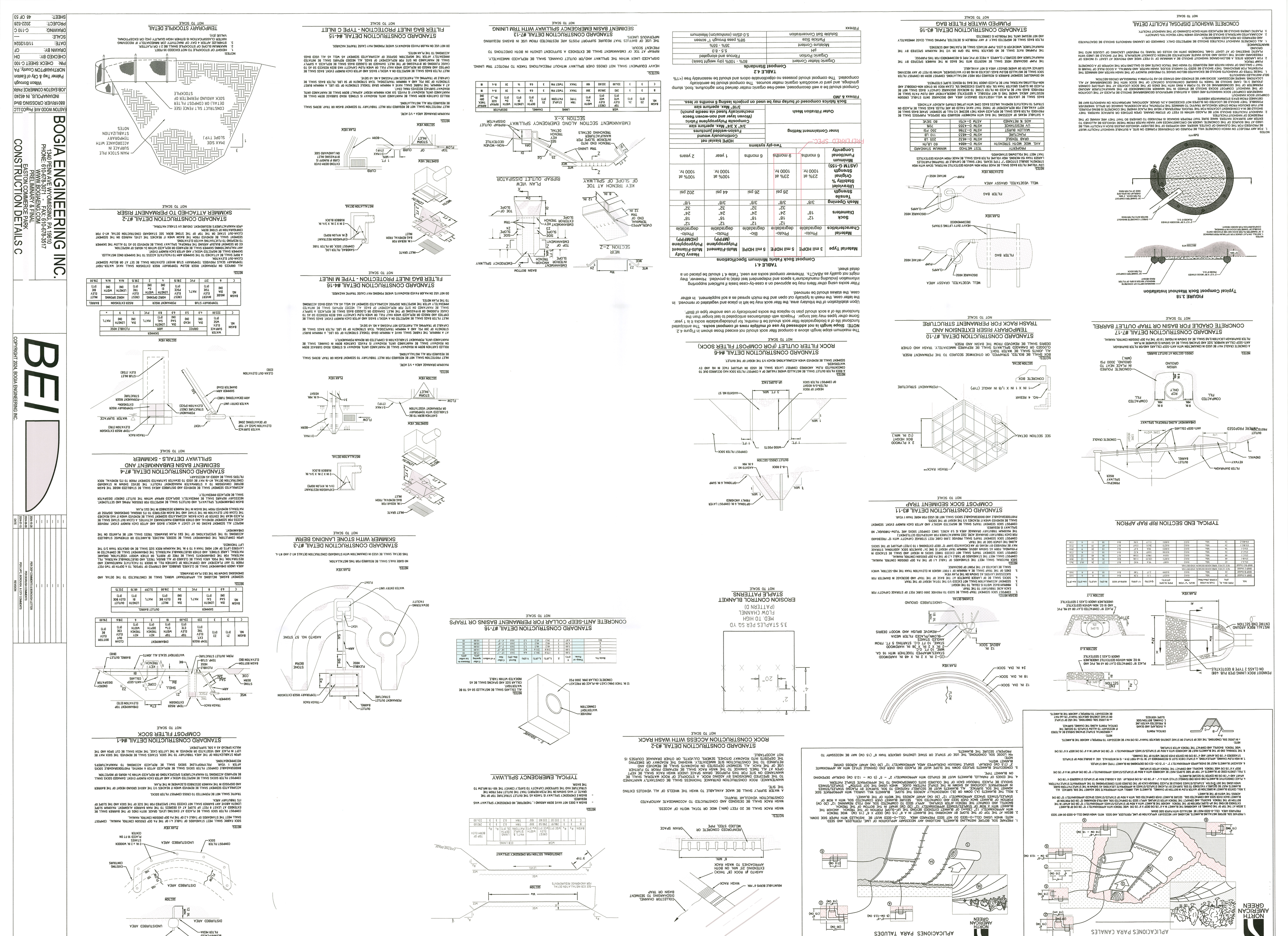


BOGIA ENGINEERING INC.
1340 PENN AVE WYOMISSING, PA 19610
PHONE: 610-678-3071 - FAX: 610-678-3517
WWW.BOGIAENG.COM

PRELIMINARY & FINAL
EASTON COMMERCE PARK
CONSTRUCTION DETAILS B

EASTON WOOD AVE PropCO LLC	
8801RIVER CROSSING Blvd	
INDIANAPOLIS, IN 46240	
JOB:EASTON COMMERCE PARK	
Wilson Borough	
Palmer Twp & City of Easton	
NORTHAMPTON County, PA	
PIN:	CHECK SHEET C-100
CHECKED BY:	DH
DRAWN BY:	CF
DATE:	11/01/2024
SCALE:	N.T.S.
DRAWING:	C-110 B
PROJECT:	2022-528
SHEET:	47 OF 53

COPYRIGHT 2025, BOGIA ENGINEERING INC.


BOGIA ENGINEERING INC.
1340 PENN AVE WYOMISSING, PA 19610
PHONE: 610-678-3071 FAX: 610-678-3517
WWW.BOGIAENG.COM
EASTON COMMERCE PARK
CONSTRUCTION DETAILS C
PRELIMINARY & FINAL
EASTON WOOD AVE./PHOC.LLC
680 RIVER CROSSING BLVD
INDIANAPOLIS, IN 46240
Palmer Twp & City of Easton
NORTHAMPTON County, PA
Wilson Borough
JOB & ESTON COMMERCE PARK
PIN: CHECK SHEET C-100
CHECKED BY: DH
DRAWN BY: CF
DRAWING: C-110 D
DATE: 11/01/2024
SCALE: ---
PROJECT: 2022-628
SHEET: 48 OF 53
COPYRIGHT 2024, BOGIA ENGINEERING INC.
BEI
NO. DESCRIPTION DATE
1 PRELIMINARY & FINAL 2024-10-30
2 PRELIMINARY & FINAL 2024-11-08
3 PRELIMINARY & FINAL 2024-11-15
4 PRELIMINARY & FINAL 2024-11-18
5 PRELIMINARY & FINAL 2024-11-19
6 PRELIMINARY & FINAL 2024-11-20
7 PRELIMINARY & FINAL 2024-11-21
8 PRELIMINARY & FINAL 2024-11-22
9 PRELIMINARY & FINAL 2024-11-25
10 PRELIMINARY & FINAL 2024-11-26
11 PRELIMINARY & FINAL 2024-12-04
12 PRELIMINARY & FINAL 2024-12-05
13 PRELIMINARY & FINAL 2024-12-06
14 PRELIMINARY & FINAL 2024-12-09
15 PRELIMINARY & FINAL 2024-12-10
16 PRELIMINARY & FINAL 2024-12-11
17 PRELIMINARY & FINAL 2024-12-12
18 PRELIMINARY & FINAL 2024-12-13
19 PRELIMINARY & FINAL 2024-12-16
20 PRELIMINARY & FINAL 2024-12-17
21 PRELIMINARY & FINAL 2024-12-18
22 PRELIMINARY & FINAL 2024-12-19
23 PRELIMINARY & FINAL 2024-12-20
24 PRELIMINARY & FINAL 2024-12-23
25 PRELIMINARY & FINAL 2024-12-24
26 PRELIMINARY & FINAL 2024-12-26
27 PRELIMINARY & FINAL 2024-12-27
28 PRELIMINARY & FINAL 2024-12-30
29 PRELIMINARY & FINAL 2024-12-31
30 PRELIMINARY & FINAL 2025-01-02
31 PRELIMINARY & FINAL 2025-01-03
32 PRELIMINARY & FINAL 2025-01-06
33 PRELIMINARY & FINAL 2025-01-07
34 PRELIMINARY & FINAL 2025-01-08
35 PRELIMINARY & FINAL 2025-01-09
36 PRELIMINARY & FINAL 2025-01-10
37 PRELIMINARY & FINAL 2025-01-13
38 PRELIMINARY & FINAL 2025-01-14
39 PRELIMINARY & FINAL 2025-01-15
40 PRELIMINARY & FINAL 2025-01-16
41 PRELIMINARY & FINAL 2025-01-17
42 PRELIMINARY & FINAL 2025-01-20
43 PRELIMINARY & FINAL 2025-01-21
44 PRELIMINARY & FINAL 2025-01-22
45 PRELIMINARY & FINAL 2025-01-23
46 PRELIMINARY & FINAL 2025-01-24
47 PRELIMINARY & FINAL 2025-01-27
48 PRELIMINARY & FINAL 2025-01-28
49 PRELIMINARY & FINAL 2025-01-29
50 PRELIMINARY & FINAL 2025-01-30
51 PRELIMINARY & FINAL 2025-01-31
52 PRELIMINARY & FINAL 2025-02-03
53 PRELIMINARY & FINAL 2025-02-04
54 PRELIMINARY & FINAL 2025-02-05
55 PRELIMINARY & FINAL 2025-02-06
56 PRELIMINARY & FINAL 2025-02-07
57 PRELIMINARY & FINAL 2025-02-10
58 PRELIMINARY & FINAL 2025-02-11
59 PRELIMINARY & FINAL 2025-02-12
60 PRELIMINARY & FINAL 2025-02-13
61 PRELIMINARY & FINAL 2025-02-14
62 PRELIMINARY & FINAL 2025-02-17
63 PRELIMINARY & FINAL 2025-02-18
64 PRELIMINARY & FINAL 2025-02-19
65 PRELIMINARY & FINAL 2025-02-20
66 PRELIMINARY & FINAL 2025-02-21
67 PRELIMINARY & FINAL 2025-02-24
68 PRELIMINARY & FINAL 2025-02-25
69 PRELIMINARY & FINAL 2025-02-26
70 PRELIMINARY & FINAL 2025-02-27
71 PRELIMINARY & FINAL 2025-02-28
72 PRELIMINARY & FINAL 2025-03-03
73 PRELIMINARY & FINAL 2025-03-04
74 PRELIMINARY & FINAL 2025-03-05
75 PRELIMINARY & FINAL 2025-03-06
76 PRELIMINARY & FINAL 2025-03-07
77 PRELIMINARY & FINAL 2025-03-10
78 PRELIMINARY & FINAL 2025-03-11
79 PRELIMINARY & FINAL 2025-03-12
80 PRELIMINARY & FINAL 2025-03-13
81 PRELIMINARY & FINAL 2025-03-14
82 PRELIMINARY & FINAL 2025-03-17
83 PRELIMINARY & FINAL 2025-03-18
84 PRELIMINARY & FINAL 2025-03-19
85 PRELIMINARY & FINAL 2025-03-20
86 PRELIMINARY & FINAL 2025-03-21
87 PRELIMINARY & FINAL 2025-03-24
88 PRELIMINARY & FINAL 2025-03-25
89 PRELIMINARY & FINAL 2025-03-26
90 PRELIMINARY & FINAL 2025-03-27
91 PRELIMINARY & FINAL 2025-03-28
92 PRELIMINARY & FINAL 2025-03-31
93 PRELIMINARY & FINAL 2025-04-01
94 PRELIMINARY & FINAL 2025-04-02
95 PRELIMINARY & FINAL 2025-04-03
96 PRELIMINARY & FINAL 2025-04-04
97 PRELIMINARY & FINAL 2025-04-07
98 PRELIMINARY & FINAL 2025-04-08
99 PRELIMINARY & FINAL 2025-04-09
100 PRELIMINARY & FINAL 2025-04-10
101 PRELIMINARY & FINAL 2025-04-11
102 PRELIMINARY & FINAL 2025-04-14
103 PRELIMINARY & FINAL 2025-04-15
104 PRELIMINARY & FINAL 2025-04-16
105 PRELIMINARY & FINAL 2025-04-17
106 PRELIMINARY & FINAL 2025-04-18
107 PRELIMINARY & FINAL 2025-04-21
108 PRELIMINARY & FINAL 2025-04-22
109 PRELIMINARY & FINAL 2025-04-23
110 PRELIMINARY & FINAL 2025-04-24
111 PRELIMINARY & FINAL 2025-04-25
112 PRELIMINARY & FINAL 2025-04-28
113 PRELIMINARY & FINAL 2025-04-29
114 PRELIMINARY & FINAL 2025-04-30
115 PRELIMINARY & FINAL 2025-05-01
116 PRELIMINARY & FINAL 2025-05-02
117 PRELIMINARY & FINAL 2025-05-05
118 PRELIMINARY & FINAL 2025-05-06
119 PRELIMINARY & FINAL 2025-05-07
120 PRELIMINARY & FINAL 2025-05-08
121 PRELIMINARY & FINAL 2025-05-09
122 PRELIMINARY & FINAL 2025-05-12
123 PRELIMINARY & FINAL 2025-05-13
124 PRELIMINARY & FINAL 2025-05-14
125 PRELIMINARY & FINAL 2025-05-15
126 PRELIMINARY & FINAL 2025-05-16
127 PRELIMINARY & FINAL 2025-05-19
128 PRELIMINARY & FINAL 2025-05-20
129 PRELIMINARY & FINAL 2025-05-21
130 PRELIMINARY & FINAL 2025-05-22
131 PRELIMINARY & FINAL 2025-05-23
132 PRELIMINARY & FINAL 2025-05-26
133 PRELIMINARY & FINAL 2025-05-27
134 PRELIMINARY & FINAL 2025-05-28
135 PRELIMINARY & FINAL 2025-05-29
136 PRELIMINARY & FINAL 2025-05-30
137 PRELIMINARY & FINAL 2025-06-02
138 PRELIMINARY & FINAL 2025-06-03
139 PRELIMINARY & FINAL 2025-06-04
140 PRELIMINARY & FINAL 2025-06-05
141 PRELIMINARY & FINAL 2025-06-06
142 PRELIMINARY & FINAL 2025-06-09
143 PRELIMINARY & FINAL 2025-06-10
144 PRELIMINARY & FINAL 2025-06-11
145 PRELIMINARY & FINAL 2025-06-12
146 PRELIMINARY & FINAL 2025-06-13
147 PRELIMINARY & FINAL 2025-06-16
148 PRELIMINARY & FINAL 2025-06-17
149 PRELIMINARY & FINAL 2025-06-18
150 PRELIMINARY & FINAL 2025-06-19
151 PRELIMINARY & FINAL 2025-06-20
152 PRELIMINARY & FINAL 2025-06-23
153 PRELIMINARY & FINAL 2025-06-24
154 PRELIMINARY & FINAL 2025-06-25
155 PRELIMINARY & FINAL 2025-06-26
156 PRELIMINARY & FINAL 2025-06-27
157 PRELIMINARY & FINAL 2025-06-30
158 PRELIMINARY & FINAL 2025-07-01
159 PRELIMINARY & FINAL 2025-07-02
160 PRELIMINARY & FINAL 2025-07-03
161 PRELIMINARY & FINAL 2025-07-04
162 PRELIMINARY & FINAL 2025-07-07
163 PRELIMINARY & FINAL 2025-07-08
164 PRELIMINARY & FINAL 2025-07-09
165 PRELIMINARY & FINAL 2025-07-10
166 PRELIMINARY & FINAL 2025-07-11
167 PRELIMINARY & FINAL 2025-07-14
168 PRELIMINARY & FINAL 2025-07-15
169 PRELIMINARY & FINAL 2025-07-16
170 PRELIMINARY & FINAL 2025-07-17
171 PRELIMINARY & FINAL 2025-07-18
172 PRELIMINARY & FINAL 2025-07-21
173 PRELIMINARY & FINAL 2025-07-22
174 PRELIMINARY & FINAL 2025-07-23
175 PRELIMINARY & FINAL 2025-07-24
176 PRELIMINARY & FINAL 2025-07-25
177 PRELIMINARY & FINAL 2025-07-28
178 PRELIMINARY & FINAL 2025-07-29
179 PRELIMINARY & FINAL 2025-07-30
180 PRELIMINARY & FINAL 2025-07-31
181 PRELIMINARY & FINAL 2025-08-01
182 PRELIMINARY & FINAL 2025-08-04
183 PRELIMINARY & FINAL 2025-08-05
184 PRELIMINARY & FINAL 2025-08-06
185 PRELIMINARY & FINAL 2025-08-07
186 PRELIMINARY & FINAL 2025-08-08
187 PRELIMINARY & FINAL 2025-08-11
188 PRELIMINARY & FINAL 2025-08-12
189 PRELIMINARY & FINAL 2025-08-13
190 PRELIMINARY & FINAL 2025-08-14
191 PRELIMINARY & FINAL 2025-08-15
192 PRELIMINARY & FINAL 2025-08-18
193 PRELIMINARY & FINAL 2025-08-19
194 PRELIMINARY & FINAL 2025-08-20
195 PRELIMINARY & FINAL 2025-08-21
196 PRELIMINARY & FINAL 2025-08-22
197 PRELIMINARY & FINAL 2025-08-25
198 PRELIMINARY & FINAL 2025-08-26
199 PRELIMINARY & FINAL 2025-08-27
200 PRELIMINARY & FINAL 2025-08-28
201 PRELIMINARY & FINAL 2025-08-29
202 PRELIMINARY & FINAL 2025-09-02
203 PRELIMINARY & FINAL 2025-09-03
204 PRELIMINARY & FINAL 2025-09-04
205 PRELIMINARY & FINAL 2025-09-05
206 PRELIMINARY & FINAL 2025-09-08
207 PRELIMINARY & FINAL 2025-09-09
208 PRELIMINARY & FINAL 2025-09-10
209 PRELIMINARY & FINAL 2025-09-11
210 PRELIMINARY & FINAL 2025-09-12
211 PRELIMINARY & FINAL 2025-09-15
212 PRELIMINARY & FINAL 2025-09-16
213 PRELIMINARY & FINAL 2025-09-17
214 PRELIMINARY & FINAL 2025-09-18
215 PRELIMINARY & FINAL 2025-09-19
216 PRELIMINARY & FINAL 2025-09-22
217 PRELIMINARY & FINAL 2025-09-23
218 PRELIMINARY & FINAL 2025-09-24
219 PRELIMINARY & FINAL 2025-09-25
220 PRELIMINARY & FINAL 2025-09-26
221 PRELIMINARY & FINAL 2025-09-29
222 PRELIMINARY & FINAL 2025-09-30
223 PRELIMINARY & FINAL 2025-10-01
224 PRELIMINARY & FINAL 2025-10-02
225 PRELIMINARY & FINAL 2025-10-03
226 PRELIMINARY & FINAL 2025-10-06
227 PRELIMINARY & FINAL 2025-10-07
228 PRELIMINARY & FINAL 2025-10-08
229 PRELIMINARY & FINAL 2025-10-09
230 PRELIMINARY & FINAL 2025-10-10
231 PRELIMINARY & FINAL 2025-10-13
232 PRELIMINARY & FINAL 2025-10-14
233 PRELIMINARY & FINAL 2025-10-15
234 PRELIMINARY & FINAL 2025-10-16
235 PRELIMINARY & FINAL 2025-10-17
236 PRELIMINARY & FINAL 2025-10-20
237 PRELIMINARY & FINAL 2025-10-21
238 PRELIMINARY & FINAL 2025-10-22
239 PRELIMINARY & FINAL 2025-10-23
240 PRELIMINARY & FINAL 2025-10-24
241 PRELIMINARY & FINAL 2025-10-27
242 PRELIMINARY & FINAL 2025-10-28
243 PRELIMINARY & FINAL 2025-10-29
244 PRELIMINARY & FINAL 2025-10-30
245 PRELIMINARY & FINAL 2025-10-31
246 PRELIMINARY & FINAL 2025-11-03
247 PRELIMINARY & FINAL 2025-11-04
248 PRELIMINARY & FINAL 2025-11-05
249 PRELIMINARY & FINAL 2025-11-06
250 PRELIMINARY & FINAL 2025-11-07
251 PRELIMINARY & FINAL 2025-11-10
252 PRELIMINARY & FINAL 2025-11-11
253 PRELIMINARY & FINAL 2025-11-12
254 PRELIMINARY & FINAL 2025-11-13
255 PRELIMINARY & FINAL 2025-11-14
256 PRELIMINARY & FINAL 2025-11-17
257 PRELIMINARY & FINAL 2025-11-18
258 PRELIMINARY & FINAL 2025-11-19
259 PRELIMINARY & FINAL 2025-11-20
260 PRELIMINARY & FINAL 2025-11-21
261 PRELIMINARY & FINAL 2025-11-24
262 PRELIMINARY & FINAL 2025-11-25
263 PRELIMINARY & FINAL 2025-11-26
264 PRELIMINARY & FINAL 2025-11-27
265 PRELIMINARY & FINAL 2025-11-28
266 PRELIMINARY & FINAL 2025-12-01
267 PRELIMINARY & FINAL 2025-12-02
268 PRELIMINARY & FINAL 2025-12-03
269 PRELIMINARY & FINAL 2025-12-04
270 PRELIMINARY & FINAL 2025-12-05
271 PRELIMINARY & FINAL 2025-12-08
272 PRELIMINARY & FINAL 2025-12-09
273 PRELIMINARY & FINAL 2025-12-10
274 PRELIMINARY & FINAL 2025-12-11
275 PRELIMINARY & FINAL 2025-12-12
276 PRELIMINARY & FINAL 2025-12-15
277 PRELIMINARY & FINAL 2025-12-16
278 PRELIMINARY & FINAL 2025-12-17
279 PRELIMINARY & FINAL 2025-12-18
280 PRELIMINARY & FINAL 2025-12-19
281 PRELIMINARY & FINAL 2025-12-22
282 PRELIMINARY & FINAL 2025-12-23
283 PRELIMINARY & FINAL 2025-12-24
284 PRELIMINARY & FINAL 2025-12-26
285 PRELIMINARY & FINAL 2025-12-29
286 PRELIMINARY & FINAL 2025-12-30
287 PRELIMINARY & FINAL 2025-12-31
288 PRELIMINARY & FINAL 2026-01-02
289 PRELIMINARY & FINAL 2026-01-05
290 PRELIMINARY & FINAL 2026-01-06
291 PRELIMINARY & FINAL 2026-01-07
292 PRELIMINARY & FINAL 2026-01-08
293 PRELIMINARY & FINAL 2026-01-09
294 PRELIMINARY & FINAL 2026-01-12
295 PRELIMINARY & FINAL 2026-01-13
296 PRELIMINARY & FINAL 2026-01-14
297 PRELIMINARY & FINAL 2026-01-15
298 PRELIMINARY & FINAL 2026-01-16
299 PRELIMINARY & FINAL 2026-01-19
300 PRELIMINARY & FINAL 2026-01-20
301 PRELIMINARY & FINAL 2026-01-21
302 PRELIMINARY & FINAL 2026-01-22
303 PRELIMINARY & FINAL 2026-01-23
304 PRELIMINARY & FINAL 2026-01-26
305 PRELIMINARY & FINAL 2026-01-27
306 PRELIMINARY & FINAL 2026-01-28
307 PRELIMINARY & FINAL 2026-01-29
308 PRELIMINARY & FINAL 2026-01-30
309 PRELIMINARY & FINAL 2026-02-02
310 PRELIMINARY & FINAL 2026-02-03
311 PRELIMINARY & FINAL 2026-02-04
312 PRELIMINARY & FINAL 2026-02-05
313 PRELIMINARY & FINAL 2026-02-06
314 PRELIMINARY & FINAL 2026-02-09
315 PRELIMINARY & FINAL 2026-02-10
316 PRELIMINARY & FINAL 2026-02-11
317 PRELIMINARY & FINAL 2026-02-12
318 PRELIMINARY & FINAL 2026-02-13
319 PRELIMINARY & FINAL 2026-02-16
320 PRELIMINARY & FINAL 2026-02-17
321 PRELIMINARY & FINAL 2026-02-18
322 PRELIMINARY & FINAL 2026-02-19
323 PRELIMINARY & FINAL 2026-02-20
324 PRELIMINARY & FINAL 2026-02-23
325 PRELIMINARY & FINAL 2026-02-24
326 PRELIMINARY & FINAL 2026-02-25
327 PRELIMINARY & FINAL 2026-02-26
328 PRELIMINARY & FINAL 2026-02-27
329 PRELIMINARY & FINAL 2026-03-02
330 PRELIMINARY & FINAL 2026-03-03
331 PRELIMINARY & FINAL 2026-03-04
332 PRELIMINARY & FINAL 2026-03-05
333 PRELIMINARY & FINAL 2026-03-06
334 PRELIMINARY & FINAL 2026-03-09
335 PRELIMINARY & FINAL 2026-03-10
336 PRELIMINARY & FINAL 2026-03-11
337 PRELIMINARY & FINAL 2026-03-12
338 PRELIMINARY & FINAL 2026-03-13
339 PRELIMINARY & FINAL 2026-03-16
340 PRELIMINARY & FINAL 2026-03-17
341 PRELIMINARY & FINAL 2026-03-18
342 PRELIMINARY & FINAL 2026-03-19
343 PRELIMINARY & FINAL 2026-03-20
344 PRELIMINARY & FINAL 2026-03-23
345 PRELIMINARY & FINAL 2026-03-24
346 PRELIMINARY & FINAL 2026-03-25
347 PRELIMINARY & FINAL 2026-03-26
348 PRELIMINARY & FINAL 2026-03-27
349 PRELIMINARY & FINAL 2026-03-30
350 PRELIMINARY & FINAL 2026-03-31
351 PRELIMINARY & FINAL 2026-04-01
352 PRELIMINARY & FINAL 2026-04-02
353 PRELIMINARY & FINAL 2026-04-03
354 PRELIMINARY & FINAL 2026-04-06
355 PRELIMINARY & FINAL 2026-04-07
356 PRELIMINARY & FINAL 2026-04-08
357 PRELIMINARY & FINAL 2026-04-09
358 PRELIMINARY & FINAL 2026-04-10
359 PRELIMINARY & FINAL 2026-04-13
360 PRELIMINARY & FINAL 2026-04-14
361 PRELIMINARY & FINAL 2026-04-15
362 PRELIMINARY & FINAL 2026-04-16
363 PRELIMINARY & FINAL 2026-04-17
364 PRELIMINARY & FINAL 2026-04-20
365 PRELIMINARY & FINAL 2026-04-21
366 PRELIMINARY & FINAL 2026-04-22
367 PRELIMINARY & FINAL 2026-04-23
368 PRELIMINARY & FINAL 2026-04-24
369 PRELIMINARY & FINAL 2026-04-27
370 PRELIMINARY & FINAL 2026-04-28
371 PRELIMINARY & FINAL 2026-04-29
372 PRELIMINARY & FINAL 2026-04-30
373 PRELIMINARY & FINAL 2026-05-01
374 PRELIMINARY & FINAL 2026-05-04
375 PRELIMINARY & FINAL 2026-05-05
376 PRELIMINARY & FINAL 2026-05-06
377 PRELIMINARY & FINAL 2026-05-07
378 PRELIMINARY & FINAL 2026-05-08
379 PRELIMINARY & FINAL 2026-05-11
380 PRELIMINARY & FINAL 2026-05-12
381 PRELIMINARY & FINAL 2026-05-13
382 PRELIMINARY & FINAL 2026-05-14
383 PRELIMINARY & FINAL 2026-05-15
384 PRELIMINARY & FINAL 2026-05-18
385 PRELIMINARY & FINAL 2026-05-19
386 PRELIMINARY & FINAL 2026-05-20
387 PRELIMINARY & FINAL 2026-05-21
388 PRELIMINARY & FINAL 2026-05-22
389 PRELIMINARY & FINAL 2026-05-25
390 PRELIMINARY & FINAL 2026-05-26
391 PRELIMINARY & FINAL 2026-05-27
392 PRELIMINARY & FINAL 2026-05-28
393 PRELIMINARY & FINAL 2026-05-29
394 PRELIMINARY & FINAL 2026-06-01
395 PRELIMINARY & FINAL 2026-06-02
396 PRELIMINARY & FINAL 2026-06-03
397 PRELIMINARY & FINAL 2026-06-04
398 PRELIMINARY & FINAL 2026-06-05
399 PRELIMINARY & FINAL 2026-06-08
400 PRELIMINARY & FINAL 2026-06-09
401 PRELIMINARY & FINAL 2026-06-10
402 PRELIMINARY & FINAL 2026-06-11
403 PRELIMINARY & FINAL 2026-06-12
404 PRELIMINARY & FINAL 2026-06-15
405 PRELIMINARY & FINAL 2026-06-16
406 PRELIMINARY & FINAL 2026-06-17
407 PRELIMINARY & FINAL 2026-06-18
408 PRELIMINARY & FINAL 2026-06-19
409 PRELIMINARY & FINAL 2026-06-22
410 PRELIMINARY & FINAL 2026-06-23
411 PRELIMINARY & FINAL 2026-06-24
412 PRELIMINARY & FINAL 2026-06-25
413 PRELIMINARY & FINAL 2026-06-26
414 PRELIMINARY & FINAL 2026-06-29
415 PRELIMINARY & FINAL 2026-06-30
416 PRELIMINARY & FINAL 2026-07-01
417 PRELIMINARY & FINAL 2026-07-02
418 PRELIMINARY & FINAL 2026-07-03
419 PRELIMINARY & FINAL 2026-07-06
420 PRELIMINARY & FINAL 2026-07-07
421 PRELIMINARY & FINAL 2026-07-08
422 PRELIMINARY & FINAL 2026-07-09
423 PRELIMINARY & FINAL 2026-07-10
424 PRELIMINARY & FINAL 2026-07-13
425 PRELIMINARY & FINAL 2026-07-14
426 PRELIMINARY & FINAL 2026-07-15
427 PRELIMINARY & FINAL 2026-07-16
428 PRELIMINARY & FINAL 2026-07-17
429 PRELIMINARY & FINAL 2026-07-20
430 PRELIMINARY & FINAL 2026-07-21
431 PRELIMINARY & FINAL 2026-07-22
432 PRELIMINARY & FINAL 2026-07-23
433 PRELIMINARY & FINAL 2026-07-24
434 PRELIMINARY & FINAL 2026-07-27
435 PRELIMINARY & FINAL 2026-07-28
436 PRELIMINARY & FINAL 2026-07-29
437 PRELIMINARY & FINAL 2026-07-30
438 PRELIMINARY & FINAL 2026-07-31
439 PRELIMINARY & FINAL 2026-08-03
440 PRELIMINARY & FINAL 2026-08-04
441 PRELIMINARY & FINAL 2026-08-05
442 PRELIMINARY & FINAL 2026-08-06
443 PRELIMINARY & FINAL 2026-08-07
444 PRELIMINARY & FINAL 2026-08-10
445 PRELIMINARY & FINAL 2026-08-11
446 PRELIMINARY & FINAL 2026-08-12
447 PRELIMINARY & FINAL 2026-08-13
448 PRELIMINARY & FINAL 2026-08-14
449 PRELIMINARY & FINAL 2026-08-17
450 PRELIMINARY & FINAL 2026-08-18
451 PRELIMINARY & FINAL 2026-08-19
452 PRELIMINARY & FINAL 2026-08-20
453 PRELIMINARY & FINAL 2026-08-21
454 PRELIMINARY & FINAL 2026-08-24
455 PRELIMINARY & FINAL 2026-08-25
456 PRELIMINARY & FINAL 2026-08-26
457 PRELIMINARY & FINAL 2026-08-27
458 PRELIMINARY & FINAL 2026-08-28
459 PRELIMINARY & FINAL 2026-08-31
460 PRELIMINARY & FINAL 2026-09-01
461 PRELIMINARY & FINAL 2026-09-02
462 PRELIMINARY & FINAL 2026-09-03
463 PRELIMINARY & FINAL 2026-09-04
464 PRELIMINARY & FINAL 2026-09-07
465 PRELIMINARY & FINAL 2026-09-08
466 PRELIMINARY & FINAL 2026-09-09
467 PRELIMINARY & FINAL 2026-09-10
468 PRELIMINARY & FINAL 2026-09-11
469 PRELIMINARY & FINAL 2026-09-14
470 PRELIMINARY & FINAL 2026-09-15
471 PRELIMINARY & FINAL 2026-09-16
472 PRELIMINARY & FINAL 2026-09-17
473 PRELIMINARY & FINAL 2026-09-18
474 PRELIMINARY & FINAL 2026-09-21
475 PRELIMINARY & FINAL 2026-09-22
476 PRELIMINARY & FINAL 2026-09-23
477 PRELIMINARY & FINAL 2026-09-24
478 PRELIMINARY & FINAL 2026-09-25
479 PRELIMINARY & FINAL 2026-09-28
480 PRELIMINARY & FINAL 2026-09-29
481 PRELIMINARY & FINAL 2026-09-30
482 PRELIMINARY & FINAL 2026-10-01
483 PRELIMINARY & FINAL 2026-10-02
484 PRELIMINARY & FINAL 2026-10-05
485 PRELIMINARY & FINAL 2026-10-06
486 PRELIMINARY & FINAL 2026-10-07
487 PRELIMINARY & FINAL 2026-10-08
488 PRELIMINARY & FINAL 2026-10-09
489 PRELIMINARY & FINAL 2026-10-12
490 PRELIMINARY & FINAL 2026-10-13
491 PRELIMINARY & FINAL 2026-10-14
492 PRELIMINARY & FINAL 2026-10-15
493 PRELIMINARY & FINAL 2026-10-16
494 PRELIMINARY & FINAL 2026-10-19
495 PRELIMINARY & FINAL 2026-10-20
496 PRELIMINARY & FINAL 2026-10-21
497 PRELIMINARY & FINAL 2026-10-22
498 PRELIMINARY & FINAL 2026-10-23
499 PRELIMINARY & FINAL 2026-10-26
500 PRELIMINARY & FINAL 2026-10-27
501 PRELIMINARY & FINAL 2026-10-28
502 PRELIMINARY & FINAL 2026-10-29
503 PRELIMINARY & FINAL 2026-10-30
504 PRELIMINARY & FINAL 2026-11-02
505 PRELIMINARY & FINAL 2026-11-03
506 PRELIMINARY & FINAL 2026-11-04
507 PRELIMINARY & FINAL 2026-11-05
508 PRELIMINARY & FINAL 2026-11-06
509 PRELIMINARY & FINAL 2026-11-09
510 PRELIMINARY & FINAL 2026-11-10
511 PRELIMINARY & FINAL 2026-11-11
512 PRELIMINARY & FINAL 2026-11-12
513 PRELIMINARY & FINAL 2026-11-13
514 PRELIMINARY & FINAL 2026-11-16
515 PRELIMINARY & FINAL 2026-11-17
516 PRELIMINARY & FINAL 2026-11-18
517 PRELIMINARY & FINAL 2026-11-19
518 PRELIMINARY & FINAL 2026-11-20
519 PRELIMINARY & FINAL 2026-11-23
520 PRELIMINARY & FINAL 2026-11-24
521 PRELIMINARY & FINAL 2026-11-25
522 PRELIMINARY & FINAL 2026-11-26
523 PRELIMINARY & FINAL 2026-11-27
524 PRELIMINARY & FINAL 2026-11-30
525 PRELIMINARY & FINAL 2026-12-01
526 PRELIMINARY & FINAL 2026-12-02
527 PRELIMINARY & FINAL 2026-12-03
528 PRELIMINARY & FINAL 2026-12-04
529 PRELIMINARY & FINAL 2026-12-07
530 PRELIMINARY & FINAL 2026-12-08
531 PRELIMINARY & FINAL 2026-12-09
532 PRELIMINARY & FINAL 2026-12-10
533 PRELIMINARY & FINAL 2026-12-11
534 PRELIMINARY & FINAL 2026-12-14
535 PRELIMINARY & FINAL 2026-12-15
536 PRELIMINARY & FINAL 2026-12-16
537 PRELIMINARY & FINAL 2026-12-17
538 PRELIMINARY & FINAL 2026-12-18
539 PRELIMINARY & FINAL 2026-12-21
540 PRELIMINARY & FINAL 2026-12-22
541 PRELIMINARY & FINAL 2026-12-23
542 PRELIMINARY & FINAL 2026-12-24
543 PRELIMINARY & FINAL 2026-12-25
544 PRELIMINARY & FINAL 2026-12-28
545 PRELIMINARY & FINAL 2026-12-29
546 PRELIMINARY & FINAL 2026-12-30
547 PRELIMINARY & FINAL 2026-12-31
548 PRELIMINARY & FINAL 2027-01-04
549 PRELIMINARY & FINAL 2027-01-05
550 PRELIMINARY & FINAL 2027-01-06
551 PRELIMINARY & FINAL 2027-01-07
552 PRELIMINARY & FINAL 2027-01-08
553 PRELIMINARY & FINAL 2027-01-11
554 PRELIMINARY & FINAL 2027-01-12
555 PRELIMINARY & FINAL 2027-01-13
556 PRELIMINARY & FINAL 2027-01-14
557 PRELIMINARY & FINAL 2027-01-15
558 PRELIMINARY & FINAL 2027-01-18
559 PRELIMINARY & FINAL 2027-01-19
560 PRELIMINARY & FINAL 2027-01-20
561 PRELIMINARY & FINAL 2027-01-21
562 PRELIMINARY & FINAL 2027-01-22
563 PRELIMINARY & FINAL 2027-01-25
564 PRELIMINARY & FINAL 2027-01-26
565 PRELIMINARY & FINAL 2027-01-27
566 PRELIMINARY & FINAL 2027-01-28
567 PRELIMINARY & FINAL 2027-01-29
568 PRELIMINARY & FINAL 2027-02-01
569 PRELIMINARY & FINAL 2027-02-02
570 PRELIMINARY & FINAL 2027-02-03
571 PRELIMINARY & FINAL 2027-02-04
572 PRELIMINARY & FINAL 2027-02-05
573 PRELIMINARY & FINAL 2027-02-08
574 PRELIMINARY & FINAL 2027-02-09
575 PRELIMINARY & FINAL 2027-02-10
576 PRELIMINARY & FINAL 2027-02-11
577 PRELIMINARY & FINAL 2027-02-12
578 PRELIMINARY & FINAL 2027-02-15
579 PRELIMINARY & FINAL 2027-02-16
580 PRELIMINARY & FINAL 2027-02-17
581 PRELIMINARY & FINAL 2027-02-18
582 PRELIMINARY & FINAL 2027-02-19
583 PRELIMINARY & FINAL 2027-02-22
584 PRELIMINARY & FINAL 2027-02-23
585 PRELIMINARY & FINAL 2027-02-24
586 PRELIMINARY & FINAL 2027-02-25
587 PRELIMINARY & FINAL 2027-02-26
588 PRELIMINARY & FINAL 2027-03-01
589 PRELIMINARY & FINAL 2027-03-02
590 PRELIMINARY & FINAL 2027-03-03
591 PRELIMINARY & FINAL 2027-03-04
592 PRELIMINARY & FINAL 2027-03-05
593 PRELIMINARY & FINAL 2027-03-08
594 PRELIMINARY & FINAL 2027-03-09
595 PRELIMINARY & FINAL 2027-03-10
596 PRELIMINARY & FINAL 2027-03-11
597 PRELIMINARY & FINAL 2027-03-12
598 PRELIMINARY & FINAL 2027-03-15
599 PRELIMINARY & FINAL 2027-03-16
600 PRELIMINARY & FINAL 2027-03-17
601 PRELIMINARY & FINAL 2027-03-18
602 PRELIMINARY & FINAL 2027-03-19
603 PRELIMINARY & FINAL 2027-03-22
604 PRELIMINARY & FINAL 2027-03-23
605 PRELIMINARY & FINAL 2027-03-24
606 PRELIMINARY & FINAL 2027-03-25
607 PRELIMINARY & FINAL 2027-03-26
608 PRELIMINARY & FINAL 2027-03-29
609 PRELIMINARY & FINAL 2027-03-30
610 PRELIMINARY & FINAL 2027-03-31
611 PRELIMINARY & FINAL 2027-04-01
612 PRELIMINARY & FINAL 2027-04-02
613 PRELIMINARY & FINAL 2027-04-05
614 PRELIMINARY & FINAL 2027-04-06
615 PRELIMINARY & FINAL 2027-04-07
616 PRELIMINARY & FINAL 2027-04-08
617 PRELIMINARY & FINAL 2027-04-09
618 PRELIMINARY & FINAL 2027-04-12
619 PRELIMINARY & FINAL 2027-04-13
620 PRELIMINARY & FINAL 2027-04-14
621 PRELIMINARY & FINAL 2027-04-15
622 PRELIMINARY & FINAL 2027-04-16
623 PRELIMINARY & FINAL 2027-04-19
624 PRELIMINARY & FINAL 2027-04-20
625 PRELIMINARY & FINAL 2027-04-21
626 PRELIMINARY & FINAL 2027-04-22
627 PRELIMINARY & FINAL 2027-04-23
628 PRELIMINARY & FINAL 2027-04-26
629 PRELIMINARY & FINAL 2027-04-27
630 PRELIMINARY & FINAL 2027-04-28
631 PRELIMINARY & FINAL 2027-04-29
632 PRELIMINARY & FINAL 2027-04-30
633 PRELIMINARY & FINAL 2027-05-03
634 PRELIMINARY & FINAL 2027-05-04
635 PRELIMINARY & FINAL 2027-05-05
636 PRELIMINARY & FINAL 2027-05-06
637 PRELIMINARY & FINAL 2027-05-07
638 PRELIMINARY & FINAL 2027-05-10
639 PRELIMINARY & FINAL 2027-05-11
640 PRELIMINARY & FINAL 2027-05-12
641 PRELIMINARY & FINAL 2027-05-13
642 PRELIMINARY & FINAL 2027-05-14
643 PRELIMINARY & FINAL 2027-05-17
644 PRELIMINARY & FINAL 2027-05-18
645 PRELIMINARY & FINAL 2027-05-19
646 PRELIMINARY & FINAL 2027-05-20
647 PRELIMINARY & FINAL 2027-05-21
648 PRELIMINARY & FINAL 2027-05-24
649 PRELIMINARY & FINAL 2027-05-25
650 PRELIMINARY & FINAL 2027-05-26
651 PRELIMINARY & FINAL 2027-05-27
652 PRELIMINARY & FINAL 2027-05-28
653 PRELIMINARY & FINAL 2027-06-01
654 PRELIMINARY & FINAL 2027-06-02
655 PRELIMINARY & FINAL 2027-06-03
656 PRELIMINARY & FINAL 2027-06-04
657 PRELIMINARY & FINAL 2027-06-07
658 PRELIMINARY & FINAL 2027-06-08
659 PRELIMINARY & FINAL 2027-06-09
660 PRELIMINARY & FINAL 2027-06-10
661 PRELIMINARY & FINAL 2027-06-11
662 PRELIMINARY & FINAL 2027-06-14
663 PRELIMINARY & FINAL 2027-06-15
664 PRELIMINARY & FINAL 2027-06-16
665 PRELIMINARY & FINAL 2027-06-17
666 PRELIMINARY & FINAL 2027-06-18
667 PRELIMINARY & FINAL 2027-06-21
668 PRELIMINARY & FINAL 2027-06-22
669 PRELIMINARY & FINAL 2027-06-23
670 PRELIMINARY & FINAL 2027-06-24
671 PRELIMINARY & FINAL 2027-06-25
672 PRELIMINARY & FINAL 2027-06-28
673 PRELIMINARY & FINAL 2027-06-29
674 PRELIMINARY & FINAL 2027-06-30
675 PRELIMINARY & FINAL 2027-07-01
676 PRELIMINARY & FINAL 2027-07-02
677 PRELIMINARY & FINAL