CHANNEL INSTALLATION
APLICACIONES PARA CANALES

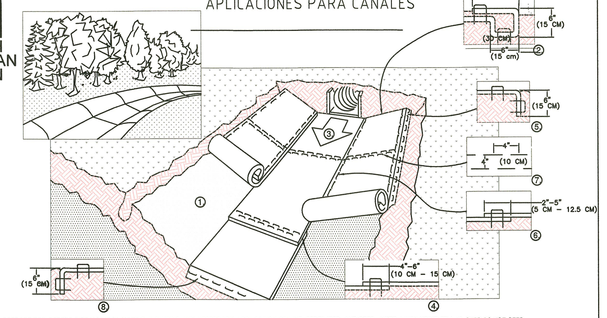

1. PREPARE SOIL BEFORE INSTALLING BLANKETS, INCLUDING ANY NECESSARY APPLICATION OF LIME, FERTILIZER, AND SEED. NOTE: WHEN USING CELL-O-SEED DO NOT SEED PREPARED AREA. CELL-O-SEED MUST BE INSTALLED WITH PAPER SIDE DOWN.
2. BEGIN AT THE TOP OF THE CHANNEL BY ANCHORING THE BLANKET IN A 6" (15 CM) DEEP X 6" (15 CM) WIDE TRENCH WITH APPROXIMATELY 12" (30cm) OF BLANKET EXTENDED BEYOND THE UP-SLOPE PORTION OF THE TRENCH. ANCHOR THE BLANKET WITH A ROW OF STAPLES/STAKES APPROXIMATELY 12" (30 CM) APART IN BOTTOM OF THE TRENCH. BACKFILL AND COMPACT THE TRENCH AFTER STAPLING. APPLY SEED TO COMPACTED SOIL AND FOLD REMAINING 12" (30 CM) PORTION OF BLANKET BACK OVER SEED. NAILS SHOULD BE SPACED APPROXIMATELY 12" (30 CM) APART ACROSS THE WIDTH OF THE BLANKET. SECURE BLANKET OVER COMPACTED SOIL WITH A ROW OF STAPLES/STAKES SPACED APPROXIMATELY 12" (30 CM) APART ACROSS THE WIDTH OF THE BLANKET.
3. ROLL THE BLANKETS (A.) DOWN OR (B.) HORIZONTALLY ACROSS THE SLOPE. BLANKETS WILL UNROLL WITH APPROPRIATE SIDE AGAINST THE SOIL SURFACE. ALL BLANKETS MUST BE SECURELY FASTENED TO SOIL SURFACE BY PLACING STAPLES/STAKES IN APPROPRIATE LOCATIONS AS SHOWN IN THE STAPLE PATTERN GUIDE. WHEN USING DOT SYSTEM, STAPLES/STAKES SHOULD BE PLACED THROUGH EACH OF THE COLORED DOTS CORRESPONDING TO THE APPROPRIATE STAPLE PATTERN.
4. THE EDGES OF PARALLEL BLANKETS MUST BE STAPLED WITH APPROXIMATELY 2" – 5" (5 CM – 12.5 CM) OVERLAP DEPENDING ON BLANKET TYPE.
5. CONSECUTIVE BLANKETS SPLICED DOWN THE SLOPE MUST BE PLACED END OVER END (SHINGLE STYLE) WITH AN APPROXIMATE 3" (7.5 CM) OVERLAP. STAPLE THROUGH OVERLAPPED AREA, APPROXIMATELY 12" (30 CM) APART ACROSS ENTIRE BLANKET WIDTH.
NOTE: IN LOOSE SOIL CONDITIONS, THE USE OF STAPLE OR STAKE LENGTHS GREATER THAN 6" (15 CM) MAY BE NECESSARY TO PROPERLY SECURE THE BLANKETS.

SLOPE INSTALLATION
APLICACIONES PARA TALUDES

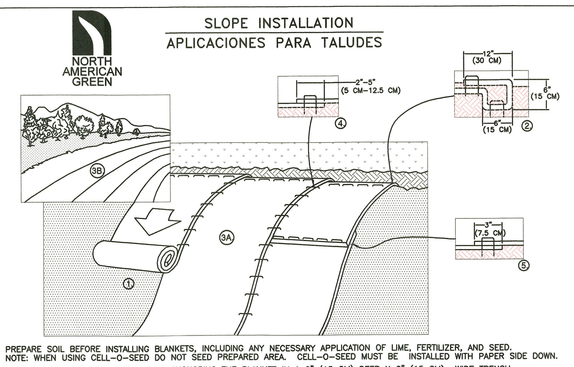

1. PREPARE SOIL BEFORE INSTALLING BLANKETS, INCLUDING ANY NECESSARY APPLICATION OF LIME, FERTILIZER, AND SEED. NOTE: WHEN USING CELL-O-SEED DO NOT SEED PREPARED AREA. CELL-O-SEED MUST BE INSTALLED WITH PAPER SIDE DOWN.
2. BEGIN AT THE TOP OF THE SLOPE BY ANCHORING THE BLANKET IN A 6" (15 CM) DEEP X 6" (15 CM) WIDE TRENCH WITH APPROXIMATELY 12" (30cm) OF BLANKET EXTENDED BEYOND THE UP-SLOPE PORTION OF THE TRENCH. ANCHOR THE BLANKET WITH A ROW OF STAPLES/STAKES APPROXIMATELY 12" (30 CM) APART IN BOTTOM OF THE TRENCH. BACKFILL AND COMPACT THE TRENCH AFTER STAPLING. APPLY SEED TO COMPACTED SOIL AND FOLD REMAINING 12" (30 CM) PORTION OF BLANKET BACK OVER SEED. NAILS SHOULD BE SPACED APPROXIMATELY 12" (30 CM) APART ACROSS THE WIDTH OF THE BLANKET. SECURE BLANKET OVER COMPACTED SOIL WITH A ROW OF STAPLES/STAKES SPACED APPROXIMATELY 12" (30 CM) APART ACROSS THE WIDTH OF THE BLANKET.
3. ROLL THE BLANKETS (A.) DOWN OR (B.) HORIZONTALLY ACROSS THE SLOPE. BLANKETS WILL UNROLL WITH APPROPRIATE SIDE AGAINST THE SOIL SURFACE. ALL BLANKETS MUST BE SECURELY FASTENED TO SOIL SURFACE BY PLACING STAPLES/STAKES IN APPROPRIATE LOCATIONS AS SHOWN IN THE STAPLE PATTERN GUIDE. WHEN USING DOT SYSTEM, STAPLES/STAKES SHOULD BE PLACED THROUGH EACH OF THE COLORED DOTS CORRESPONDING TO THE APPROPRIATE STAPLE PATTERN.
4. THE EDGES OF PARALLEL BLANKETS MUST BE STAPLED WITH APPROXIMATELY 2" – 5" (5 CM – 12.5 CM) OVERLAP DEPENDING ON BLANKET TYPE.
5. CONSECUTIVE BLANKETS SPLICED DOWN THE SLOPE MUST BE PLACED END OVER END (SHINGLE STYLE) WITH AN APPROXIMATE 3" (7.5 CM) OVERLAP. STAPLE THROUGH OVERLAPPED AREA, APPROXIMATELY 12" (30 CM) APART ACROSS ENTIRE BLANKET WIDTH.
NOTE: IN LOOSE SOIL CONDITIONS, THE USE OF STAPLE OR STAKE LENGTHS GREATER THAN 6" (15 CM) MAY BE NECESSARY TO PROPERLY SECURE THE BLANKETS.

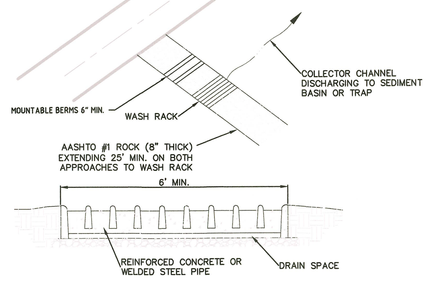

NOTES:

WASH RACK SHALL BE 20 FEET (MIN.) WIDE OR TOTAL WIDTH OF ACCESS.

WASH RACK SHALL BE DESIGNED AND CONSTRUCTED TO ACCOMMODATE ANTICIPATED CONSTRUCTION VEHICULAR TRAFFIC.

A WATER SUPPLY SHALL BE MADE AVAILABLE TO WASH THE WHEELS OF ALL VEHICLES EXITING THE SITE.

MAINTENANCE: ROCK CONSTRUCTION ENTRANCE THICKNESS SHALL BE CONSTANTLY MAINTAINED TO THE SPECIFIED DIMENSION BY ADDING ROCK. A STOCKPILE OF ROCK MATERIAL SHALL BE MAINTAINED ON SITE FOR THIS PURPOSE. DRAIN SPACE UNDER WASH RACK SHALL BE KEPT OPEN AT ALL TIMES. DAMAGE TO THE WASH RACK SHALL BE REPAIRED PRIOR TO FURTHER USE OF THE RACK. ALL SEDIMENT DEPOSITED ON ROADWAYS SHALL BE REMOVED AND RETURNED TO THE CONSTRUCTION SITE IMMEDIATELY. WASHING THE ROADWAY OR SWEEPING THE DEPOSITS INTO ROADWAY DITCHES, SEWERS, CULVERTS, OR OTHER DRAINAGE COURSES IS NOT ACCEPTABLE.

STANDARD CONSTRUCTION DETAIL #3-2
ROCK CONSTRUCTION ACCESS WITH WASH RACK
NOT TO SCALE

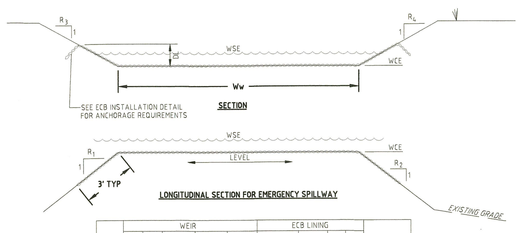

	WEIR					ECB LINING						
BASIN	R1	R2	RW	WSE (FT)	CREST ELEV WCE (FT)	Ww WIDTH (FT)	MAT'L & STAPLE PATTERN	LINING DEPTH DL (FT)	R1	R2	TOP OF BERM ELEV
B	3	3	3	286.91	290.50	300	TRM	0.2	3	3	292.00
C	3	3	3	222.92	222.82	100	TRM	0.2	3	3	224.00

NOTES:

- BASIN A DOES NOT HAVE BERM AROUND I, THEREFORE, NO EMERGENCY SPILLWAY WAS REQUIRED.
- BASIN E EMERGENCY SPILLWAY IS TAKEN AS THE OUTLET STRUCTURE TOP OF THE GRATE. IT WAS DETERMINED IN THE PCSM REPORT THAT THE OUTLET PIPE FROM THE STRUCTURE HAD THE SUFFICIENT CAPACITY TO SAFELY CONVEY THE 100-YR INFLOW TO THE BASIN.

TYPICAL EMERGENCY SPILLWAY
NOT TO SCALE

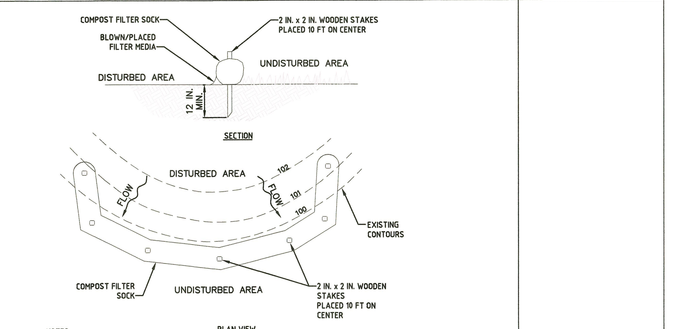

NOTES:

SOCK FABRIC SHALL MEET STANDARDS OF TABLE 4.1 OF THE PA DEP EROSION CONTROL MANUAL. COMPOST SHALL MEET THE STANDARDS OF TABLE 4.2 OF THE PA DEP EROSION CONTROL MANUAL.

COMPOST FILTER SOCK SHALL BE PLACED AT EXISTING LEVEL GRADE. BOTH ENDS OF THE BARRIER SHALL BE EXTENDED AT LEAST 8 FEET UP SLOPE AT 45 DEGREES TO THE MAIN BARRIER ALIGNMENT. MAXIMUM SLOPE LENGTH ABOVE ANY BARRIER SHALL NOT EXCEED THAT SPECIFIED FOR THE SIZE OF THE SOCK AND THE SLOPE OF ITS TRIBUTARY AREA.

TRAFFIC SHALL NOT BE PERMITTED TO CROSS COMPOST FILTER SOCKS.

ACCUMULATED SEDIMENT SHALL BE REMOVED WHEN IT REACHES 1/2 THE ABOVE GROUND HEIGHT OF THE BARRIER AND DISPOSED IN THE MANNER DESCRIBED IN THE PLAN.

COMPOST FILTER SOCKS SHALL BE INSPECTED WEEKLY AND AFTER EACH RUNOFF EVENT. DAMAGED SOCKS SHALL BE REPAIRED ACCORDING TO MANUFACTURER'S SPECIFICATIONS OR REPLACED WITHIN 24 HOURS OF INSPECTION.

BIODEGRADABLE COMPOST FILTER SOCKS SHALL BE REPLACED AFTER 6 MONTHS. PHOTODEGRADABLE SOCKS AFTER 1 YEAR. POLYPROPYLENE SOCKS SHALL BE REPLACED ACCORDING TO MANUFACTURER'S RECOMMENDATIONS.

UPON STABILIZATION OF THE AREA TRIBUTARY TO THE SOCK, STAKES SHALL BE REMOVED. THE SOCK MAY BE LEFT IN PLACE AND VEGETATED OR REMOVED. IN THE LATTER CASE, THE MESH SHALL BE CUT OPEN AND THE MULCH SPREAD AS A SOIL SUPPLEMENT.

STANDARD CONSTRUCTION DETAIL #4-1
COMPOST FILTER SOCK
NOT TO SCALE

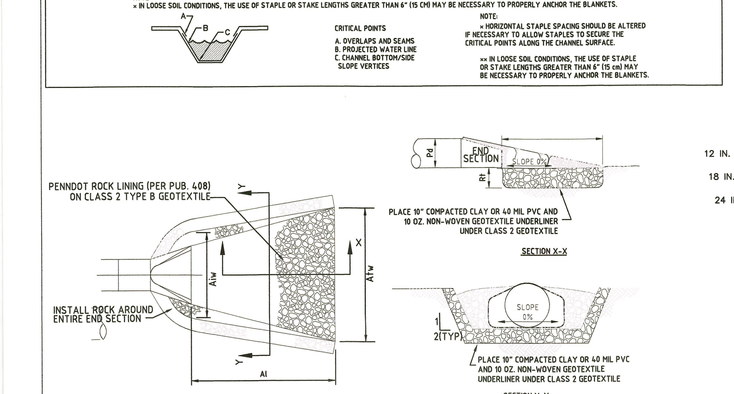

NO.	PIPE DIA. D, (IN)	TAILWATER COND. (Hse/Hse)	MAX. "n" FOR PIPE	PIPE SLOPE (FT/FT)	Q (CFS)	V1 (FPS)	RIPRAP SIZE	B1 (FT)	A1 (FT)	A16 (FT)	A36 (FT)
BMP A Outlet	24	Min.	0.012	0.0327	1.17	5.28	R-4	18	9	6	14.0
BMP B Outlet	24	Min.	0.012	0.0199	2.17	7.80	R-4	18	9	6	14.0
BMP C Outlet	SEE LEVEL SPREADER DESIGN AND DETAIL										
BMP E Outlet	SEE LEVEL SPREADER DESIGN AND DETAIL										
US-C1	41	Min.	0.012	0.007	95.4	9.92	R-5	27	26	10.5	36.5
US-B1	60	Min.	0.012	0.0071	150.9	12.06	R-6	36	39	12.12	50.8
US-C1	48	Min.	0.012	0.014	196.9	12.66	R-7	36	49	12.12	52.0
US-C2	24	Min.	0.012	0.0104	14.67	8.21	R-4	18	9	6	17.0
US-C3	36	Min.	0.012	0.0031	50.6	8.47	R-4	18	20	9	29.0
US-B1-1	24	Min.	0.012	0.0275	20.51	13.07	R-7	45	19	6	25.0
US-B5-2	24	Min.	0.012	0.0031	11.17	3.94	R-4	18	11	6	17.0

TYPICAL END SECTION RIP RAP APRON

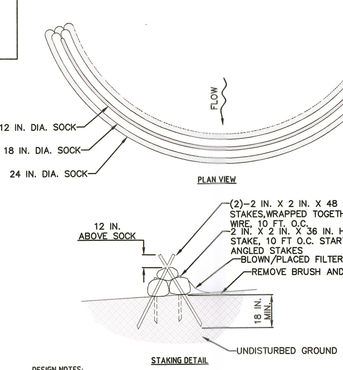

DESIGN NOTES:
1. COMPOST SOCK SEDIMENT TRAP SHALL BE SIZED TO PROVIDE 2000 CUBIC FEET OF STORAGE CAPACITY FOR EACH ACRE TRIBUTARY TO THE TRAP.
2. MINIMUM BASE WIDTH IS EQUAL TO THE HEIGHT.
3. SEDIMENT ACCUMULATION SHALL NOT EXCEED 1/3 THE TOTAL HEIGHT OF THE TRAP.
4. SOCKS SHALL BE OF LARGER DIAMETER AT THE BASE OF THE TRAP AND DECREASE IN DIAMETER FOR SUCCESSIVE LAYERS AS SHOWN ON THE PLAN VIEW.
5. ENDS OF THE TRAP SHALL BE A MINIMUM OF 1 FOOT HIGHER IN ELEVATION THAN THE MID-SECTION, WHICH SHALL BE LOCATED AT THE POINT OF DISCHARGE.

NOTES:
SOCK MATERIAL SHALL MEET THE STANDARDS OF TABLE 4.1 OF THE PA DEP EROSION CONTROL MANUAL. COMPOST SHALL MEET THE STANDARDS OF TABLE 4.2 OF THE PA DEP EROSION CONTROL MANUAL.
COMPOST SOCK SEDIMENT TRAPS SHALL NOT EXCEED THREE SOCKS IN HEIGHT AND SHALL BE STACKED IN PYRAMIDAL FORM AS SHOWN ABOVE. MINIMUM TRAP HEIGHT IS ONE 24" DIAMETER SOCK. ADDITIONAL STORAGE MAY BE PROVIDED BY MEANS OF AN EXCAVATED SUMP 12" DEEP EXTENDING 1 TO 3 FEET UPSLOPE OF THE SOCKS ALONG THE LOWER SIDE OF THE TRAP.
COMPOST SOCK SEDIMENT TRAPS SHALL PROVIDE 2,000 CUBIC FEET STORAGE CAPACITY WITH 12" FREEBOARD FOR EACH TRIBUTARY DRAINAGE ACRE. (SEE MANUFACTURER FOR ANTICIPATED SETTLEMENT).
THE MAXIMUM TRIBUTARY DRAINAGE AREA IS 5.0 ACRES. SINCE COMPOST SOCKS ARE "FLOW-THROUGH," NO SPILLWAY IS REQUIRED.
COMPOST SOCK SEDIMENT TRAPS SHALL BE INSPECTED WEEKLY AND AFTER EACH RUNOFF EVENT. SEDIMENT SHALL BE REMOVED WHEN IT REACHES 1/3 THE HEIGHT OF THE SOCKS.
PHOTODEGRADABLE AND BIODEGRADABLE SOCKS SHALL NOT BE USED FOR MORE THAN 1 YEAR.

STANDARD CONSTRUCTION DETAIL #3-11
COMPOST SOCK SEDIMENT TRAP
NOT TO SCALE

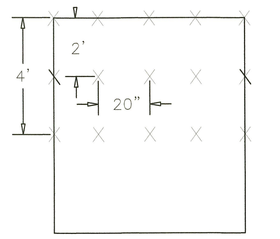

EROSION CONTROL BLANKET
STAPLE PATTERNS
NOT TO SCALE

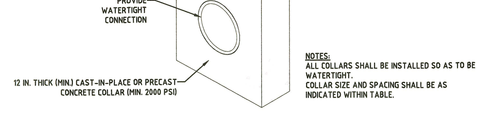

NOTES:
ALL COLLARS SHALL BE INSTALLED SO AS TO BE WATERTIGHT.
COLLAR SIZE AND SPACING SHALL BE AS INDICATED WITHIN TABLE.

Basin No.	Temp. or Perm.	Y (FT)	Z	L_1(FT)	L_2(FT)	V (IN)	Barrel Dia. (IN)	Collar Size	# of collars	Collar spacing (FT)	Distance to 1st collar (FT)
A		5.00	3	175.8	201.3	4.8	24.0	37'-3"	2	14.00	10
B		5.00	3	218.8	251.8	8.2	24.0	38'-9"	2	14.00	10
C		5.00	3	40.2	46.3	1.5	24.0	9'-0"	2	10.00	10
E		4.50	3	40.2	46.3	1.5	24.0	9'-0"	2	10.00	10
BO		4.67	3	39.1	45.2	1.5	18.0	8'-5"	2	10.00	10

STANDARD CONSTRUCTION DETAIL #7-16
CONCRETE ANTI-SEEP COLLAR FOR PERMANENT BASINS OR TRAPS
NOT TO SCALE

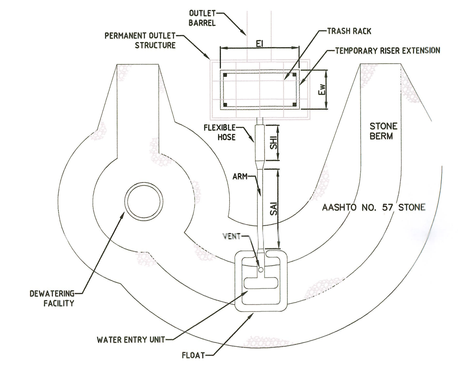

NOTES:
NO GUIDE RAILS SHALL BE REQUIRED FOR THIS INSTALLATION.
THIS DETAIL SHALL BE USED IN CONJUNCTION WITH STANDARD CONSTRUCTION DETAILS #7-2 AND #7-4.

STANDARD CONSTRUCTION DETAIL #7-3
SKIMMER WITH STONE LANDING BERM
NOT TO SCALE

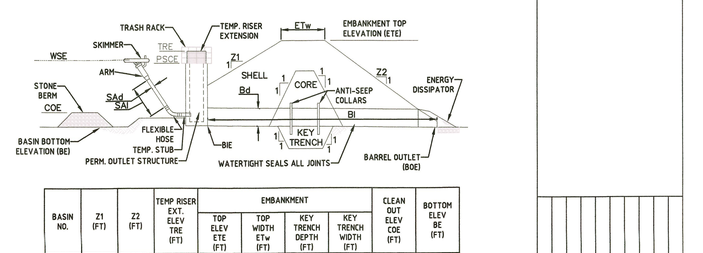

BASIN NO.	Z1 (FT)	Z2 (FT)	TEMP. RISER EXT. ELEV TRE (FT)	EMBANKMENT					CLEAN OUT ELEV COE (FT)	BOTTOM ELEV BE (FT)
				TOP ELEV ETE (FT)	TOP WIDTH ETw (FT)	TOP LENGTH ETL (FT)	KEY TRENCH DEPTH (FT)	KEY TRENCH WIDTH (FT)		
C	3	3	220	224.00	10	3	4	6	218.6	216.00

BASIN NO.	SKIMMER			OUTLET BARREL					
	DIA Sd (IN)	LENGTH SAl (FT)	MAT'L	DIA Bd (IN)	INLET ELEV BE (FT)	MAT'L	LENGTH Bl (FT)	OUTLET ELEV BOE (FT)
C	6.0	8	PVC	24	216.00	SLCPP	68.70	212.75

NOTES:

SEDIMENT BASINS, INCLUDING ALL APPURTENANT WORKS, SHALL BE CONSTRUCTED TO THE DETAIL AND DIMENSIONS SHOWN ON THE E&S PLAN DRAWINGS.

AREA UNDER EMBANKMENT SHALL BE CLEARED, GRUBBED, AND STRIPPED OF TOPSOIL TO A DEPTH OF TWO FEET PRIOR TO ANY PLACEMENT AND COMPACTION OF EARTHEN FILL IN ORDER TO FACILITATE MAINTENANCE AND RESTORATION. THE POOL AREA SHALL BE CLEARED OF ALL BRUSH, TREES, AND OBJECTIONABLE MATERIAL. FILL MATERIAL FOR THE EMBANKMENTS SHALL BE FREE OF ROOTS, OR OTHER WOODY VEGETATION, ORGANIC MATERIAL, LARGE STONES, AND OTHER OBJECTABLE MATERIALS. THE EMBANKMENT SHALL BE COMPACTED IN LAYERED LIFTS OF NOT MORE THAN 6 TO 9 IN. THE MAXIMUM ROCK SIZE SHALL BE NO GREATER THAN 2/3 THE LIFT THICKNESS.

UPON COMPLETION, THE EMBANKMENT SHALL BE SEEDED, MULCHED, BLANKETED OR OTHERWISE STABILIZED ACCORDING TO THE SPECIFICATIONS OF THE E&S PLAN DRAWINGS. TREES SHALL NOT BE PLANTED ON THE EMBANKMENT.

INSPECT ALL SEDIMENT BASINS ON AT LEAST A WEEKLY BASIS AND AFTER EACH RUNOFF EVENT. PROVIDE ACCESS FOR SEDIMENT REMOVAL AND OTHER REQUIRED MAINTENANCE ACTIVITIES. A CLEAN OUT STAKE SHALL BE PLACED NEAR THE CENTER OF EACH BASIN. ACCUMULATED SEDIMENT SHALL BE REMOVED WHEN IT HAS REACHED THE CLEAN OUT ELEVATION ON THE STAKE AND THE BASIN RESTORED TO ITS ORIGINAL DIMENSIONS. DISPOSE OF MATERIALS REMOVED FROM THE BASIN IN THE MANNER DESCRIBED IN THE E&S PLAN.

BASIN EMBANKMENTS, SPILLWAYS, AND OUTLETS SHALL BE INSPECTED FOR EROSION, PIPING AND SETTLEMENT. NECESSARY REPAIRS SHALL BE IMMEDIATELY. DISPLACED RIPRAP WITHIN THE OUTLET ENERGY DISSIPATER SHALL BE REPLACED IMMEDIATELY.

ACCUMULATED SEDIMENT SHALL BE REMOVED AND DISTURBED AREAS SHALL BE STABILIZED INSIDE THE BASIN BEFORE CONVERSION TO A STORMWATER MANAGEMENT FACILITY. THE DEVICE SHOWN IN STANDARD CONSTRUCTION DETAIL #7-16 MAY BE USED TO DEWATER SATURATED SEDIMENT PRIOR TO ITS REMOVAL. ROCK FILTERS SHALL BE ADDED AS NECESSARY.

STANDARD CONSTRUCTION DETAIL #7-4
SEDIMENT BASIN EMBANKMENT AND SPILLWAY DETAILS - SKIMMER
NOT TO SCALE

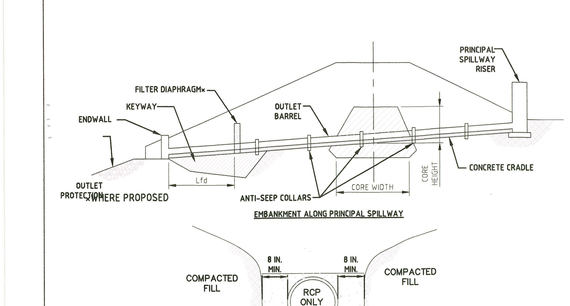

NOTES:
A CONCRETE CRADLE MAY BE USED IN CONJUNCTION WITH ANTI-SEEP COLLARS AND/OR FILTER DIAPHRAGM.
ANTI-SEEP COLLAR NUMBER, SIZE AND SPACING SHALL BE AS SHOWN ELSEWHERE IN PLAN.
FILTER DIAPHRAGM LOCATION (L1d) SHALL BE AS SHOWN IN FIGURE 7.8 OF THE PA DEP EROSION CONTROL MANUAL.

STANDARD CONSTRUCTION DETAIL #7-17
CONCRETE CRADLE FOR BASIN OR TRAP OUTLET BARREL
NOT TO SCALE

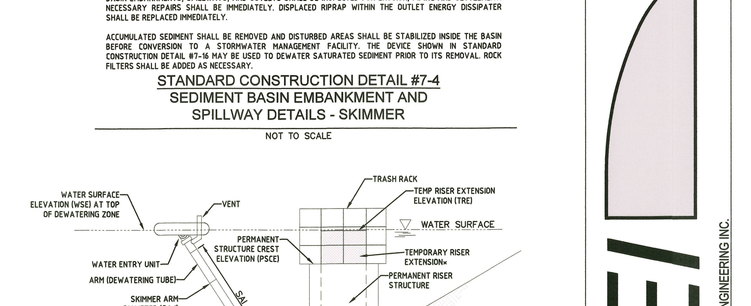

BASIN NO.	WATER SURFACE ELEV. WSE (FT)	SKIMMER					
		ORIFICE		ARM		FLEXIBLE HOSE	
		DIA. (IN)	HEAD (IN)	DIA. SAd (IN)	LENGTH SAL (FT)	DIA. (IN)	LENGTH (IN)	MAT'L
C	222.00	4.0	5.0	6.0	8.0	PVC	3	9	*

BASIN NO.	TEMPORARY STUB		PERMANENT RISER			RISER EXTENSION		BARREL	
	INSIDE DIA (IN)	INVERT ELEV TSE (FT)	MAT'L	CREST ELEV PSCE (FT)	HORIZ OPENING LENGTH EL (IN)	HORIZ OPENING WIDTH Ew (IN)	CREST ELEV TRE (FT)	HORIZ OPENING LENGTH (IN)	HORIZ OPENING WIDTH (IN)	INLET ELEV BE (FT)
C	6	217	PVC	218.15	4	2	218.15	N/A	N/A	216.00

NOTES:

ALL ORIFICES ON PERMANENT RISER BELOW TEMPORARY RISER EXTENSION SHALL HAVE WATER-TIGHT TEMPORARY SEALS PROVIDED. TEMPORARY STUB INVERT ELEVATION SHALL BE SET AT OR BELOW SEDIMENT CLEAN-OUT ELEVATION.
A ROPE SHALL BE ATTACHED TO THE SKIMMER ARM TO FACILITATE ACCESS TO THE SKIMMER ONCE INSTALLED.
SKIMMER SHALL BE INSPECTED WEEKLY AND AFTER EACH RUNOFF EVENT.
ANY MALFUNCTIONING SKIMMER SHALL BE REPAIRED OR REPLACED WITHIN 24 HOURS OF INSPECTION.
ICE OR SEDIMENT BUILDUP AROUND THE PRINCIPAL SPILLWAY SHALL BE REMOVED SO AS TO ALLOW THE SKIMMER TO RESPOND TO FLUCTUATING WATER ELEVATIONS.
SEDIMENT SHALL BE REMOVED FROM THE BASIN WHEN IT REACHES THE LEVEL MARKED ON THE SEDIMENT CLEAN-OUT STAKE OR THE TOP OF THE STONE BERM. SEE STANDARD CONSTRUCTION DETAIL #7-3 FOR CONFIGURATION OF STONE BERM.
•PER MANUFACTURER'S REQUIREMENT. ENSURE UV STABLE MATERIAL.

STANDARD CONSTRUCTION DETAIL #7-2
SKIMMER ATTACHED TO PERMANENT RISER
NOT TO SCALE

FIGURE 3.18
Typical Compost Sock Washout Installation

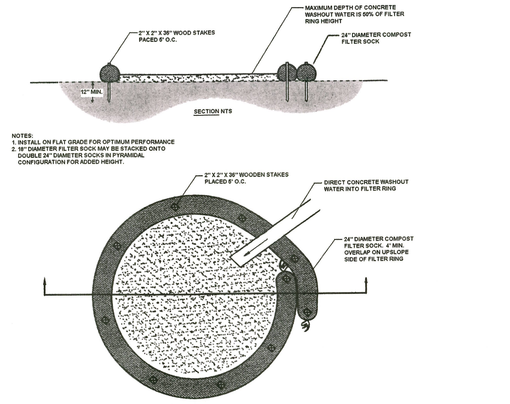

NOTES:
1. FOR ANY PROJECT ON WHICH CONCRETE WILL BE POURED OR OTHERWISE FORMED ON SITE, A SUITABLE WASHOUT FACILITY MUST BE PROVIDED FOR THE CLEANING OF CHUTES, MIXERS, AND HOPPERS OF THE DELIVERY VEHICLES UNLESS SUCH A FACILITY WILL BE USED AT THE SOURCE OF THE CONCRETE. UNDER NO CIRCUMSTANCES MAY WASH WATER FROM THESE VEHICLES BE ALLOWED TO ENTER ANY SURFACE WATERS. MAKE SURE THAT PROPER SIGNAGE IS PROVIDED TO DRIVERS SO THAT THEY ARE AWARE OF THE PRESENCE OF WASHOUT FACILITIES.
2. WASHOUT FACILITIES SHOULD NOT BE PLACED WITHIN 50 FEET OF STORM DRAINS, OPEN DITCHES OR SURFACE WATERS. THEY SHOULD BE IN A CONVENIENT LOCATION FOR THE TRUCKS, PREFERABLY NEAR THE PLACE WHERE THE CONCRETE IS BEING POURED, BUT FAR ENOUGH FROM OTHER VEHICULAR TRAFFIC TO MINIMIZE THE POTENTIAL FOR ACCIDENTAL DAMAGE OR SPILLS. WHEREVER POSSIBLE THEY SHOULD BE LOCATED ON SLOPES NOT EXCEEDING A 2% GRADE. ADDITIONAL INFORMATION ON WASHOUTS MAY BE FOUND ON THE PENNSYLVANIA STORMWATER WEBSITE

COMPOST SOCK WASHOUTS

WHEREVER COMPOST SOCK WASHOUTS ARE USED, A SUITABLE IMPERVIOUS GEOMEMBRANE SHOULD BE PLACED AT THE LOCATION OF THE WASHOUT. COMPOST SOCKS SHOULD BE STAKED IN THE MANNER RECOMMENDED BY THE MANUFACTURER AROUND PERIMETER OF THE GEOMEMBRANE SO AS TO FORM A RING WITH THE ENDS OF THE SOCK LOCATED AT THE UPSLOPE CORNER (FIGURE 3.18). CARE SHOULD BE TAKEN TO ENSURE CONTINUOUS CONTACT OF THE SOCK WITH THE GEOMEMBRANE AT ALL LOCATIONS. WHERE NECESSARY, SOCKS MAY BE STACKED AND STAKED SO AS TO FORM A TRIANGULAR CROSS-SECTION.

SELF-INSTALLED WASHOUTS:
1. THESE TYPES OF WASHOUTS SHOULD BE EXCAVATED BELOW GRADE TO PREVENT RUNOFF OF THE WASH WATER AND MINIMIZE THE POTENTIAL FOR BREACHING. THEY SHOULD BE SIZED TO HANDLE SOLIDS, WASH WATER, AND RAINFALL. A GOOD RULE OF THUMB IS THAT 7 GALLONS OF WASH WATER ARE REQUIRED TO WASH ONE TRUCK CHUTE AND 50 GALLONS FOR THE HOPPER OF A CONCRETE PUMP TRUCK.
2. FOR LARGER SITES, A BELOW-GRADE WASHOUT SHOULD BE A MINIMUM OF 10 FEET WIDE AND PROVIDE AT LEAST 12 INCHES OF FREEBOARD ABOVE THE LIQUID AND SOLID WASTE ANTICIPATED BETWEEN CLEANOUT INTERVALS. THE PIT SHOULD BE LINED WITH PLASTIC SHEETING OF AT LEAST 10-MIL THICKNESS (WITH NO HOLES OR TEARS) TO PREVENT LEACHING OF LIQUIDS INTO THE GROUND.

MAINTENANCE:
1. ALL CONCRETE WASHOUT FACILITIES SHOULD BE INSPECTED DAILY. DAMAGED OR LEAKING WASHOUTS SHOULD BE DEACTIVATED AND REPAIRED OR REPLACED IMMEDIATELY.
2. ACCUMULATED MATERIALS SHOULD BE REMOVED WHEN THEY REACH 75% CAPACITY.
3. PLASTIC LINERS SHOULD BE REPLACED WITH EACH CLEANING OF THE WASHOUT FACILITY.

CONCRETE WASHOUT DISPOSAL FACILITY DETAIL
NOT TO SCALE

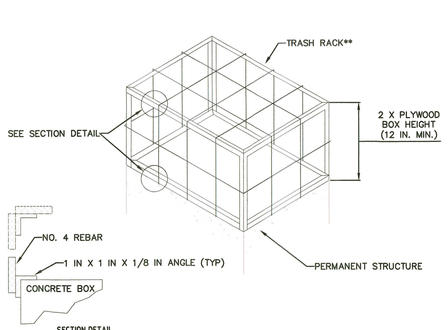

NOTES:
BOX SHALL BE BOLTED, STRAPPED, OR OTHERWISE SECURED TO THE PERMANENT RISER.
ALL JOINTS SHALL BE WATER TIGHT.
CLOGGED OR DAMAGED SPILLWAYS SHALL BE REPAIRED IMMEDIATELY. TRASH AND OTHER DEBRIS SHALL BE REMOVED FROM THE BASIN AND RISER.

STANDARD CONSTRUCTION DETAIL #7-10
TE

PROJECT TITLE: EASTON COMMERCE PARK

EXISTING FEATURES LEGEND:

- EXISTING BOUNDARY WITH CORNER
- PERMDOT LEGAL RIGHT-OF-WAY
- EXISTING ADJOINING BOUNDARY LINE
- EXISTING SETBACK
- EXISTING BUILDING
- EXISTING CONCRETE FEATURE
- 300 EXISTING MAJOR CONTOUR
- 222 EXISTING MINOR CONTOUR
- EXISTING CURB
- EXISTING EDGE OF ASPHALT
- W/4 EXISTING FENCE LINE
- EXISTING PAVEMENT MARKING WITH LABEL
- EXISTING SIGN
- EXISTING TREE LINE
- EXISTING EASEMENT
- EXISTING RIGHT OF WAY
- EXISTING SANITARY SEWER
- EXISTING ELECTRIC LINE
- EXISTING STORM PIPE
- EXISTING STREAM
- EXISTING GUARDRAIL
- EXISTING SOILS
- EXISTING GRAVEL
- EXISTING TIME OF CONCENTRATION
- EXISTING DRAINAGE AREA
- EXISTING LIMIT OF DISTURBANCE (85.00 ACRES)
- W1≤2 EXISTING WETLAND LIMIT
- EXISTING WETLAND TBR (0.06 AC. TOTAL)
- 51≤16 EXISTING FLOOD LIMITS
- MODELED EXISTING 100-YEAR FLOOD
- ZONE A NO BASE FLOOD ELEVATION DETERMINED.
- ZONE AE BASE FLOOD ELEVATION DETERMINED.
- FLOODWAY AREAS IN ZONE AE
  THE FLOODWAY IS THE CHANNEL OF A STREAM PLUS ANY ADJACENT FLOODPLAIN AREAS THAT MUST BE KEPT FREE OF ENCROACHMENT SO THAT THE 1% ANNUAL CHANCE FLOOD CAN BE CARRIED WITHOUT SUBSTANTIAL INCREASES IN FLOOD HEIGHTS.
- ZONE X - "OTHER AREAS" AREAS OF 0.2% ANNUAL CHANCE FLOOD; AREAS OF 1% ANNUAL CHANCE FLOOD WITH AVERAGE DEPTHS OF LESS THAN 1' OR WITH DRAINAGE AREAS LESS THAN 1 SQUARE MILE, AND AREAS PROTECTED BY LEVEES FROM 1% ANNUAL CHANCE FLOOD.
- E EXISTING CABLE TELEPHONE LINE
- G EXISTING GAS LINE
- EXISTING MUNICIPAL BOUNDARY
- EXISTING SANITARY SEWER MANHOLE
- EXISTING UTILITY POLE

PROPOSED FEATURES LEGEND:

- PROJECT BOUNDARY (113.6 ACRES)
- LIMIT OF DISTURBANCE (85.00 ACRES)

GRAPHIC SCALE

200 100 0 100' 200

1" = 100'

Before You Dig Anywhere in PENNSYLVANIA
STOP! CALL 1-800-242-1776 TOLL FREE

NOTE:
The location of underground utilities shown on this plan are based on pavement markings by utility owners and surface facilities, and are approximate only. It shall be the contractors responsibility to verify the exact location and depth of utilities prior to any earthmoving activities.
The Pennsylvania One-Call serial numbers for this project are 20230511306,20230511307,20230511308 20230511309

1			
1			
1			
1			
1			
1	PER DEP COMMENTS & BOROUGH LETTER	2024-10-28	
1	PER BOROUGH COMMENTS	2024-06-06	
1	PER LVPC, LCCD & DEP COMMENTS	2024-04-15	
	REVISION	DATE	

BEI

COPYRIGHT 2024, BOGIA ENGINEERING INC.

BOGIA ENGINEERING INC.
1340 PENN AVE W'CMISSING, PA 19610
PHONE: 610-678-3071 - FAX: 610-678-3517
WWW.BOGIAENG.COM

EASTON COMMERCE PARK
PRELIMINARY & FINAL
EXISTING RESOURCE & SITE ANALYSIS

EASTON WOOD AVE PropCO LLC 8801RIVER CROSSING Blvd INDIANAPOLIS, IN 46240	
JOB:EASTON COMMERCE PARK	
Wilson Borough Palmer Twp & City of Easton NORTHAMPTON County, PA	
PIN:	CHECK SHEET C-100
CHECKED BY:	DH
DRAWN BY:	CF
DATE:	11/01/2024
SCALE:	1:100
DRAWING:	C-103
PROJECT:	2022-528
SHEET:	7 OF 53

PROJECT TITLE: EASTON COMMERCE PARK

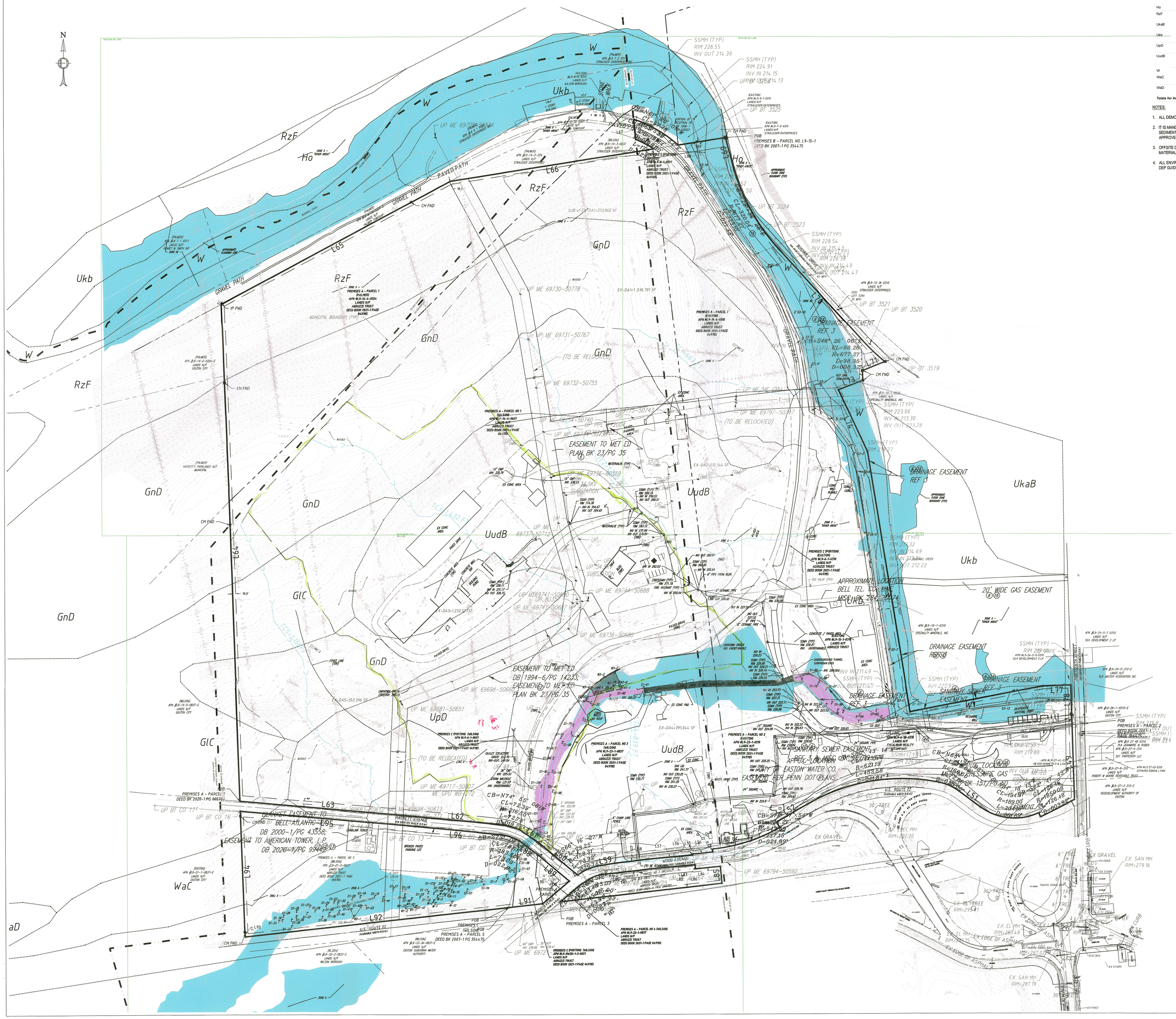
N
RzF
Ho
Ukb
W
GnD
GlC
UpD
UudB
UkaB
WaC
aD
PAVED PATH
GRAVEL PATH
EASEMENT TO MET ED
PLAN BK 23/PG 35
DRAINAGE EASEMENT
REF. 3
20' WIDE GAS EASEMENT
SANITARY SEWER EASEMENT
APPROX. LOCATION BELL TEL. CO. LINE
PREMISES A - PARCEL 1
PREMISES A - PARCEL 3
PREMISES B - PARCEL NO. L9-15-1
DED BK 2007-1 PG 354475
EASTON WATER CO.
PER PENN DOT PLANS
BELL ATLANTIC
DB 2000-1/PG 43358
EASEMENT TO AMERICAN TOWER, L.P.
DB 2020-1/PG 990
WOOD AVENUE
HANCOCK AVENUE
U.S. ROUTE 22
SSMH (TYP)
RIM 226.55
INV OUT 214.39
RIM 224.91
INV IN 214.15
INV OUT 214.13
RIM 228.54
INV IN 215.43
INV OUT 214.39
INV IN 216.49
INV OUT 214.47
RIM 223.00
INV IN 213.30
INV OUT 213.28
RIM 209.09
INV IN 211.49
INV OUT 211.47
RIM 219.88
RIM 229.9
RIM 223.77
RIM 212.22
RIM 214.69
RIM 212.32
RIM 220.20
RIM 279.16
RIM 287.19
RIM 295.1
RIM 295.48
RIM 287.25
RIM 287.48
RIM 287.19
RIM 287.18
RIM 287.17
RIM 287.16
RIM 287.15
RIM 287.14
RIM 287.13
RIM 287.12
RIM 287.11
RIM 287.10
RIM 287.09
RIM 287.08
RIM 287.07
RIM 287.06
RIM 287.05
RIM 287.04
RIM 287.03
RIM 287.02
RIM 287.01
RIM 287.00
RIM